TDC1000-TDC7200EVM User’s Guide

User's Guide

Literature Number: SNIU021A
October 2014–Revised November 2015

Contents

1 General Description **5**

2 EVM Package Contents **7**

3 Quick Start **9**

4 Software Installation **11**

4.1 Graphical User Interface (GUI) 11

5 TDC1000-TDC7200EVM Setup and Operation **13**

5.1 EVM Connections 13

5.2 Launching the Software 14

6 Troubleshooting **20**

6.1 Jumpers 20

6.2 LEDs 21

6.3 Driver Errors 21

7 Firmware Upgrade **24**

8 Board Layout **27**

9 Schematic **35**

10 Bill of Materials **39**

Revision History **44**

Copyright © 2014–2015, Texas Instruments Incorporated

List of Figures

3-1. TDC1000-TDC7200EVM Evaluation Board 9
4-1. TDC1000-TDC7200EVM Installation Directory 11
5-1. Transducer Connected to Channel 1 (TX1/RX2) 13
5-2. TDC1000_7200EVM Graph 14
5-3. Plot of TOF of Water in Test Cell 15
5-4. EVM GUI - TDC1000 Tab 16
5-5. EVM GUI – Debug Tab 16
5-6. TDC1000-TDC7200EVM Board Connected to Oscilloscope 17
5-7. START and STOP Signals on Oscilloscope 18
6-1. Jumpers 20
6-2. TDC1000-TDC7200EVM LEDs 21
6-3. Device Manager with COM Port Name 22
7-1. Connection Error Pop-up Window 24
7-2. USB Firmware Upgrade Window 25
8-1. Top Overlay 27
8-2. Top Solder Mask 28
8-3. Top Layer 29
8-4. Mid Layer 1 30
8-5. Mid Layer 2 31
8-6. Bottom Layer 32
8-7. Bottom Solder Mask 32
8-8. Board Dimensions 33
9-1. TDC1000-TDC7200EVM Schematic 1 35
9-2. TDC1000-TDC7200EVM Schematic 2 36
9-3. TDC1000-TDC7200EVM Schematic 3 37

Copyright © 2014–2015, Texas Instruments Incorporated

List of Tables

6-1. Jumpers 20
10-1. TDC1000-TDC7200EVM Bill of Materials 39

Copyright © 2014–2015, Texas Instruments Incorporated

General Description

This guide details the use of the TDC1000-TDC7200EVM evaluation module (referred to as EVM for the remainder of this document). The TDC1000 analog-front-end (AFE) is an ultrasonic analog-front-end for Time-of-Flight (TOF) applications operating with ultrasound frequencies up to 4MHz.The TDC7200 is a Time to Digital Converter (TDC) that performs the function of a stopwatch and measures the elapsed time between up to five events.

In addition to the EVM, a Steminc 15mm 1Mhz transducer is included in the evaluation kit. It has been provided for experimentation with liquid level applications and liquid identification/concentration applications. This transducer is not suitable for flow meter applications. For instructions how to mount the transducer on a tank, please refer to Application Note SNAA266 (http://www.ti.com/lit/pdf/snaa266).

The EVM can be used for many time-of-flight applications such as gas, water, and heat flow meter, fluid level detection, concentration and fluid identification, and proximity or distance measurement. The EVM allows for two ultrasonic transducer connections, and two RTD connections for temperature measurements. It uses the on-board MSP430F5528 to process data and a user-friendly GUI interface to display the data.

Copyright © 2014–2015, Texas Instruments Incorporated

Copyright © 2014–2015, Texas Instruments Incorporated

EVM Package Contents

The TDC1000-TDC7200EVM evaluation kit comes with the following:

- On-board TDC7200 and TDC1000
- On-board MPS430 microcontroller
- Steminc 15mm 1Mhz transducer (SMD15T21R111WL)
- USB Mini-B to USB-A plug cable

The example in this document uses a "test cell" which is comprised of an acrylic container with an ultrasonic transducer mounted on the side of the container. The acrylic container can be purchased from Tap Plastics at http://www.tapplastics.com/product/plastics/plastic_containers/clear_plastic_boxes/222, and/or STEMINC's transducer (p/n: SMD10T2R11) (http://www.steminc.com/PZT/en/piezo-ceramic-disc-10x2mm-r-215-khz-wire-leads-smd10t2r111wl) can be mounted on the side of the test cell. For instructions to assemble your own "Test cell" please refer to Application Note SNAA266 (http://www.ti.com/lit/pdf/snaa266).

Copyright © 2014–2015, Texas Instruments Incorporated

Copyright © 2014–2015, Texas Instruments Incorporated

Quick Start

1. Download the TDC1000-TDC7200EVM software
2. Install the GUI. For detailed information, see Chapter 4.
3. Fill the test cell with water; ensure the water level is above the transducer. Description of this test cell can be found in Chapter 2.
4. Connect the transducer to TX1 (J5, pin 8) and GND (J5, pin 7). For more information, see Section 5.1.
5. Connect the EVM board with a mini USB cable (J2).
6. Launch the GUI.
7. On the GRAPH tab, press the START GRAPH button.
8. The time of flight should be read in the TDC AVG VALUE section, and should be around 39.7 us (this result is only applicable if using the test cell discussed in Chapter 2) .

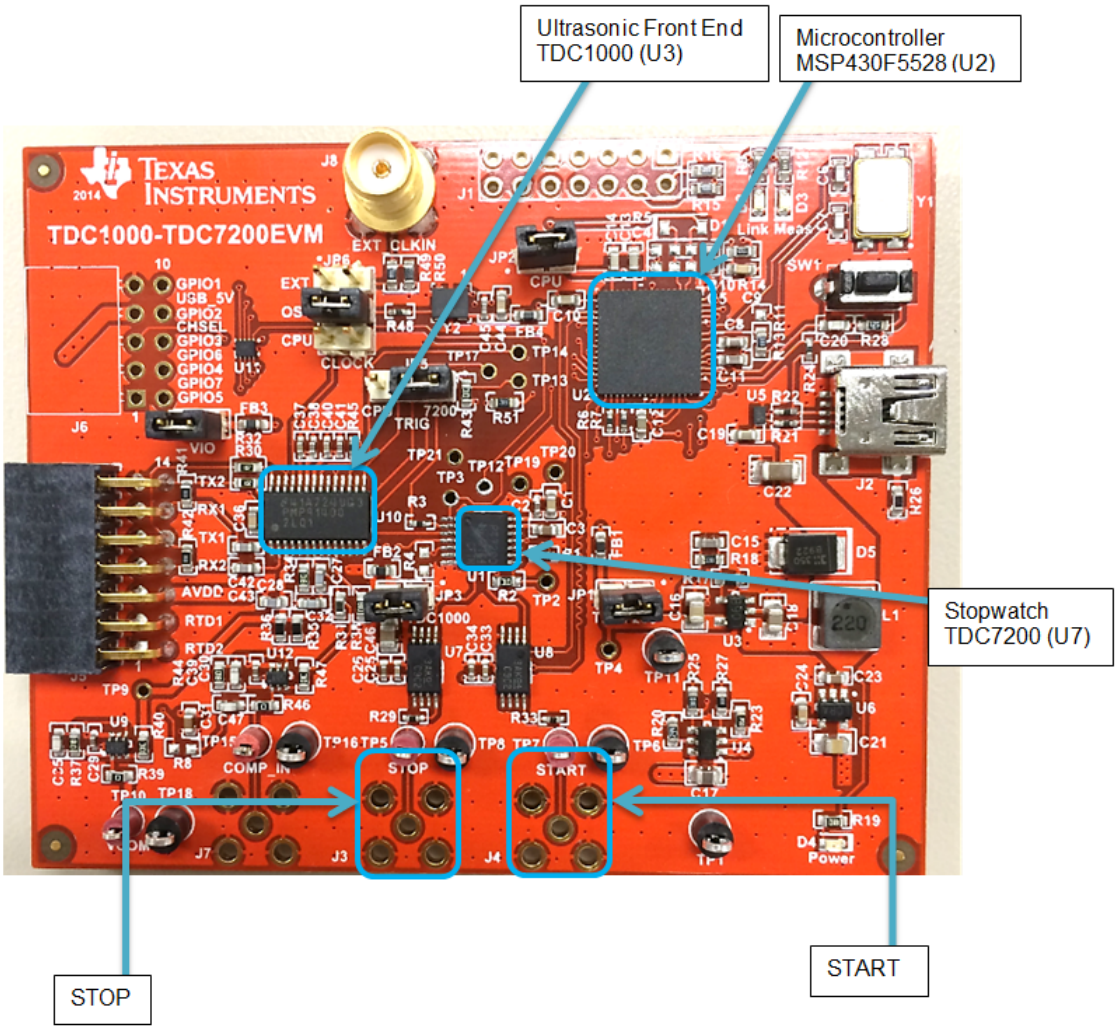

Figure 3-1. TDC1000-TDC7200EVM Evaluation Board

Copyright © 2014–2015, Texas Instruments Incorporated

Copyright © 2014–2015, Texas Instruments Incorporated

Software Installation

4.1 Graphical User Interface (GUI)

Installing the TDC1000-TDC7200EVM GUI software:

1. Download the TDC1000-TDC7200EVM_Installer-v??.zip into a known directory. This software can be found in http://www.ti.com/tool/tdc1000-tdc7200evm.
2. Make sure that the EVM has the latest firmware. For detail information, refer to Chapter 7.
3. Run the setup.exe file located in *[Unzip location]\TDC1000_7200EVM_Installer-v??.zip\TDC1000_7200EVM_Installer\Installer\Volume*.
4. Follow the pop-up screen instructions by clicking the Next button to install the software.

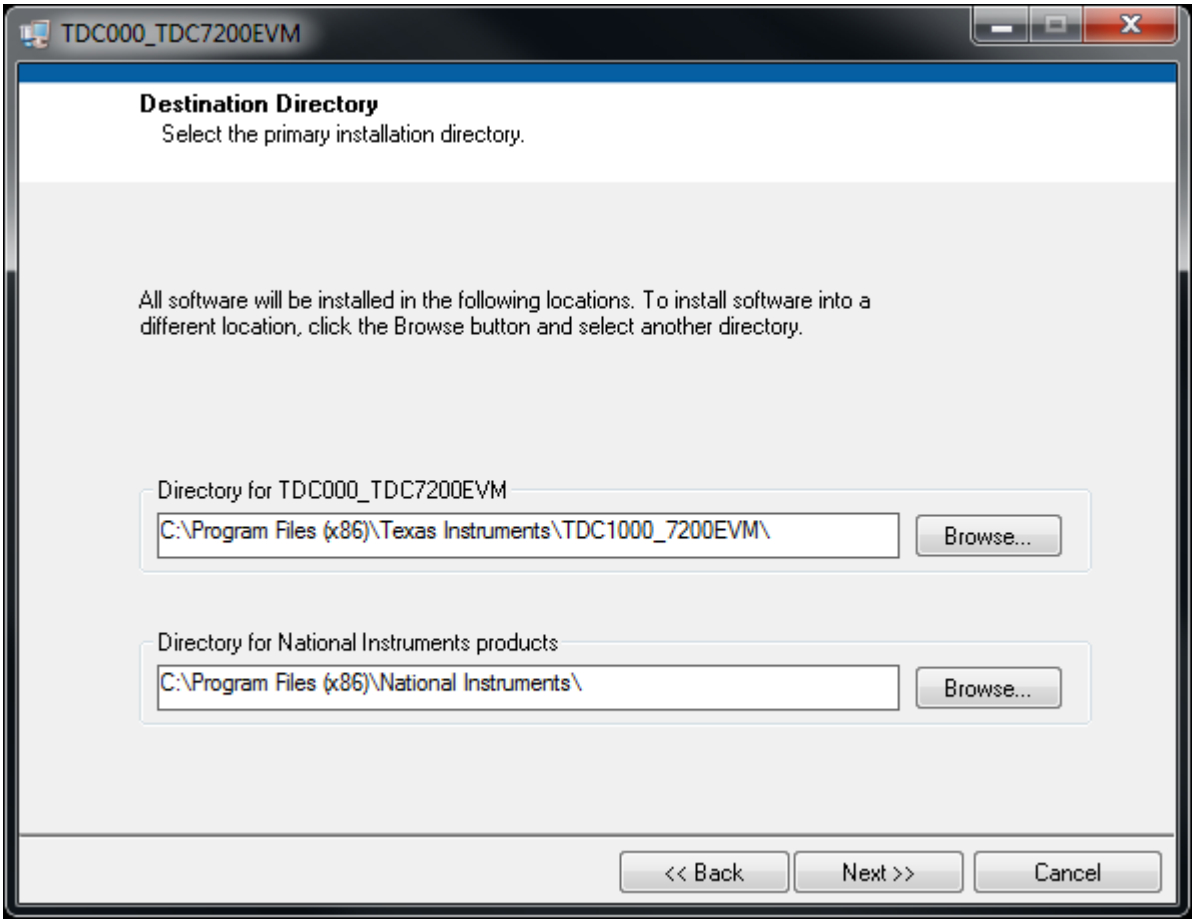

Figure 4-1. TDC1000-TDC7200EVM Installation Directory

5. When the installation is done, click Finish.

Copyright © 2014–2015, Texas Instruments Incorporated

Copyright © 2014–2015, Texas Instruments Incorporated

TDC1000-TDC7200EVM Setup and Operation

5.1 EVM Connections

1. Connect the USB cable (J2) from the EVM to the PC.
2. Obtain a test cell (see image below) with an attached transducer. Fill the test cell with water until it is above the transducer. Description of this test cell can be found in Chapter 2.
3. Attach the transducer wires to the terminals TX1/RX2 (J5, pin 8) and GND (J5, pin 7) on the EVM board (see Figure 5-1).

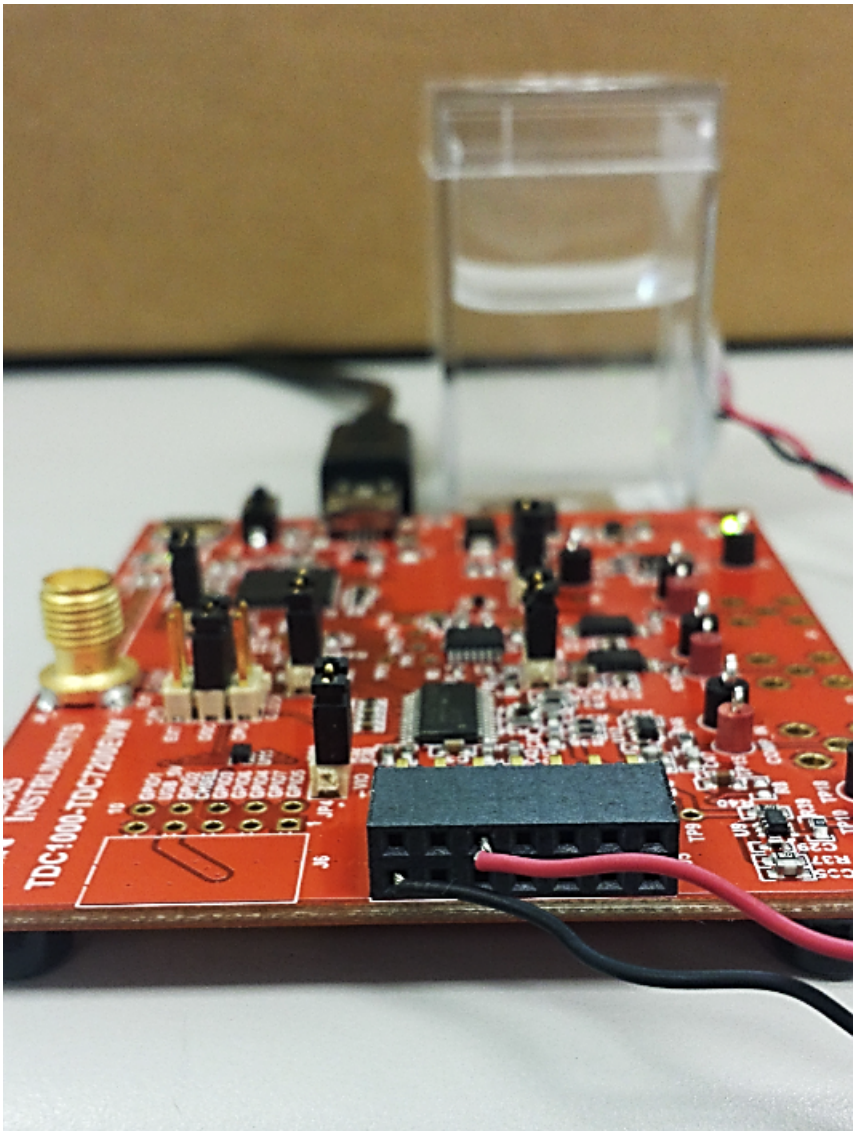

Figure 5-1. Transducer Connected to Channel 1 (TX1/RX2)

Copyright © 2014–2015, Texas Instruments Incorporated

5.2 Launching the Software

1. Run the TDC1000_TDC7200EVM GUI software by clicking on Start >> All Programs >> Texas Instruments >> TDC1000_7200.

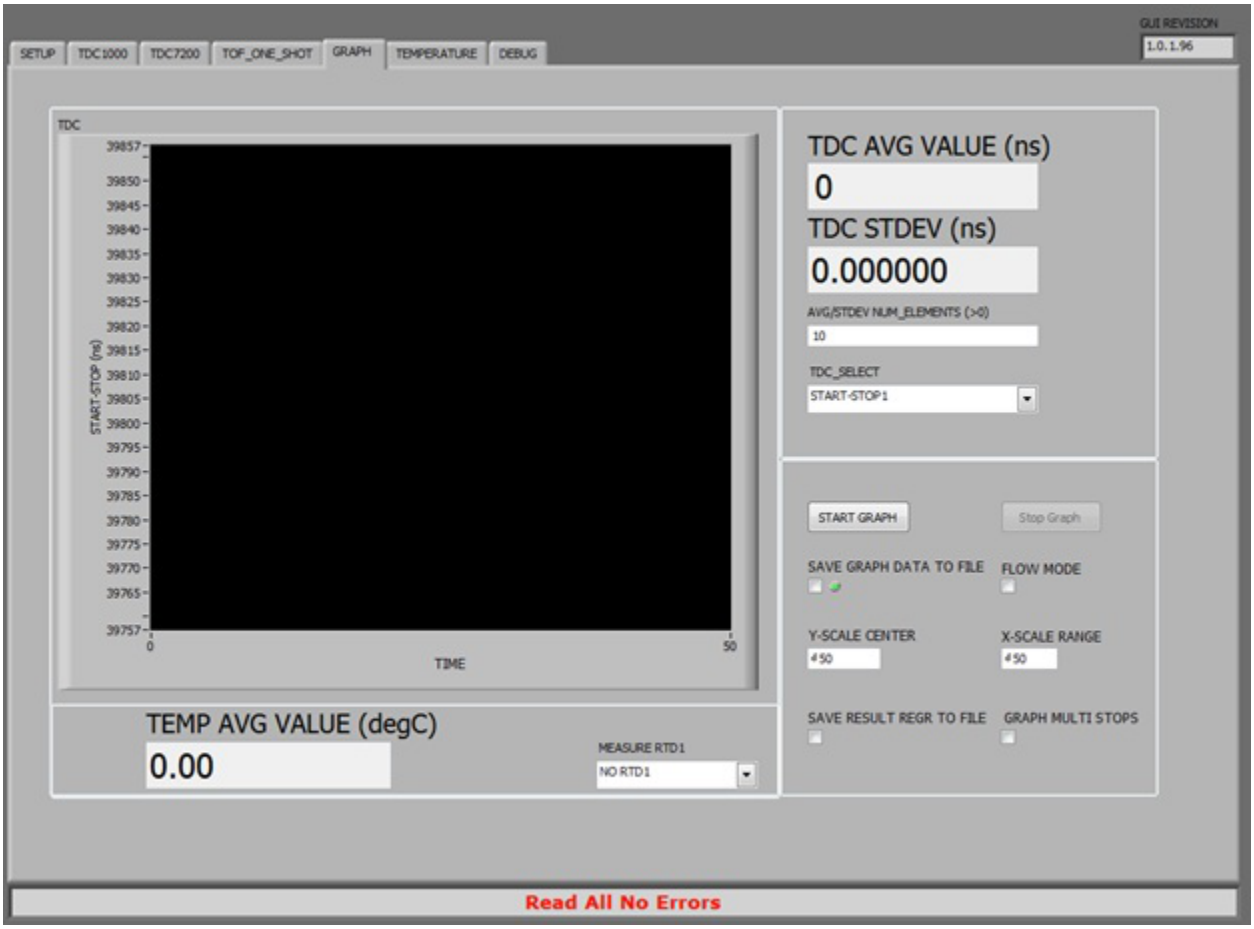

Figure 5-2. TDC1000_7200EVM Graph

2. The message at the bottom of Figure 5-2, "Read All No Errors", indicates that the GUI is up and running and all the registers and hardware connection are correct; otherwise, refer to Chapter 6 to troubleshoot.
3. Go to the GRAPH tab on the TDC1000-7200EVM GUI and click START GRAPH. The time of flight (TOF) displays in the TDC AVG VALUE window (see Figure 5-3). Note: the default settings work correctly for the test cell discussed in Chapter 2.
4. If the substance under test experiences any disturbance, either by impurities being added or by shaking the container, the graph represents this as a change on TOF.

Copyright © 2014–2015, Texas Instruments Incorporated

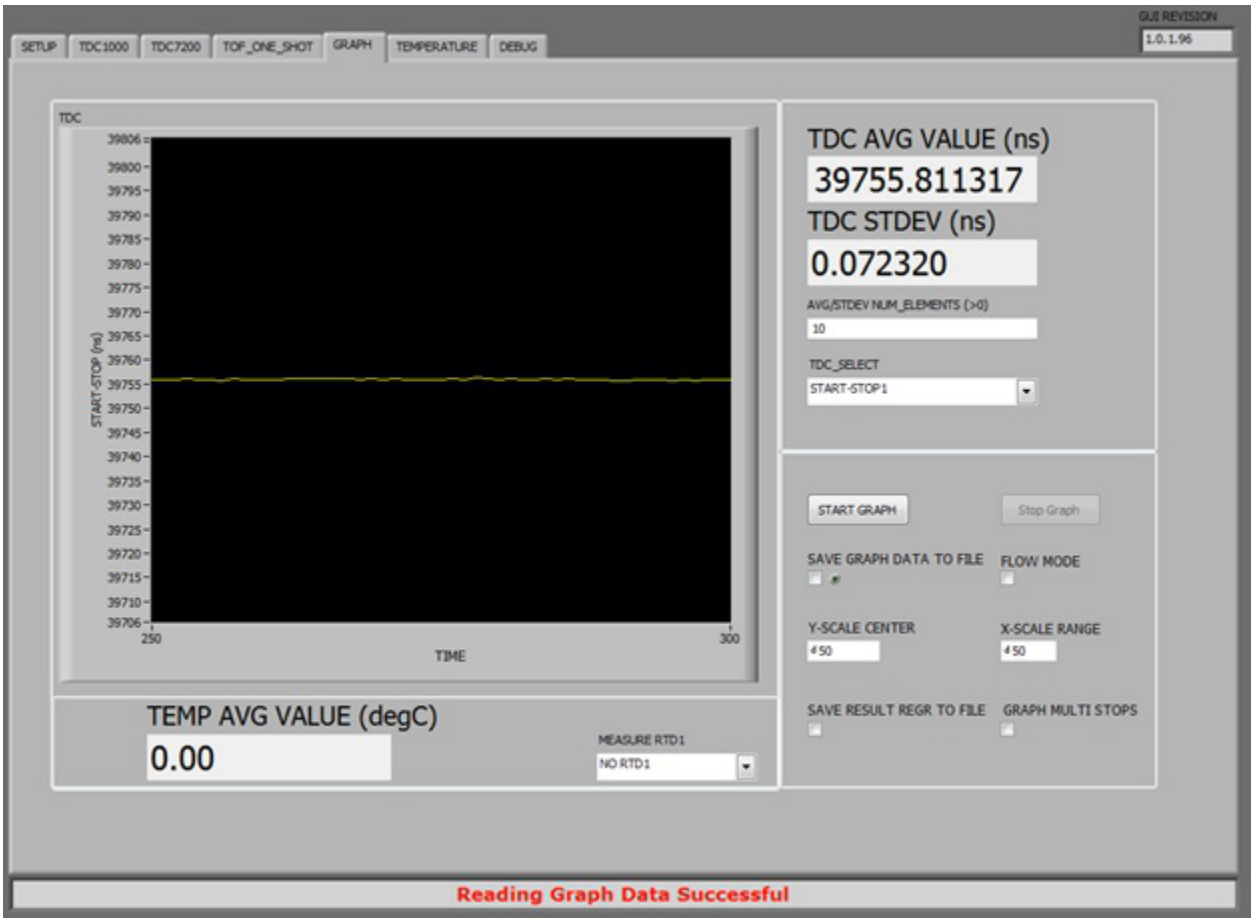

Figure 5-3. Plot of TOF of Water in Test Cell

5. Follow these steps to verify the TOF of the GUI on the oscilloscope:
   (a) In the GUI, click on the "TDC1000" tab, then click to enable "CONTINUOUS TRIGGER". Refer to Figure 5-4. The message "Start Continuous Trigger successful!!" should appear at the bottom of the GUI.
   (b) Connect the oscilloscope to the following connector:
      (i) START (J4)
      (ii) STOP (J3)
      (iii) COMP_IN (J7)
   (c) If the signal on the oscilloscope is flickering, ensure that the "ENABLE POWER CYCLE" is disabled on the DEBUG tab. Refer to Figure 5-5.

Copyright © 2014–2015, Texas Instruments Incorporated

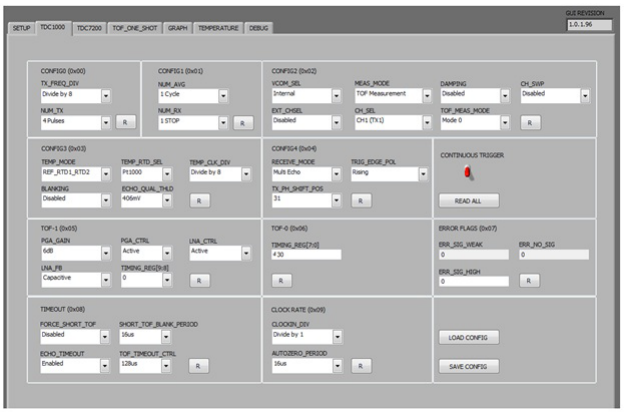

Figure 5-4. EVM GUI - TDC1000 Tab

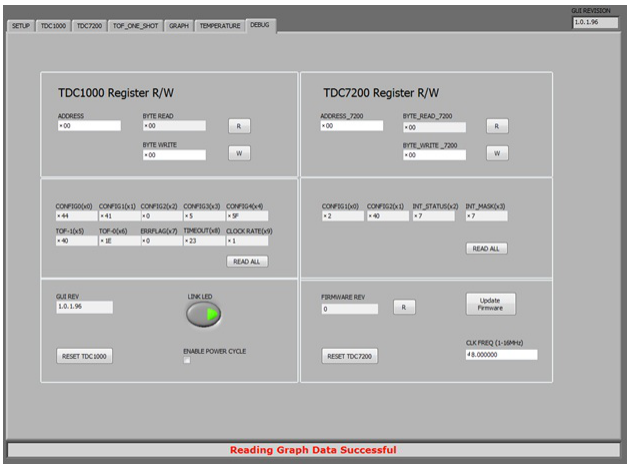

Figure 5-5. EVM GUI – Debug Tab

Copyright © 2014–2015, Texas Instruments Incorporated

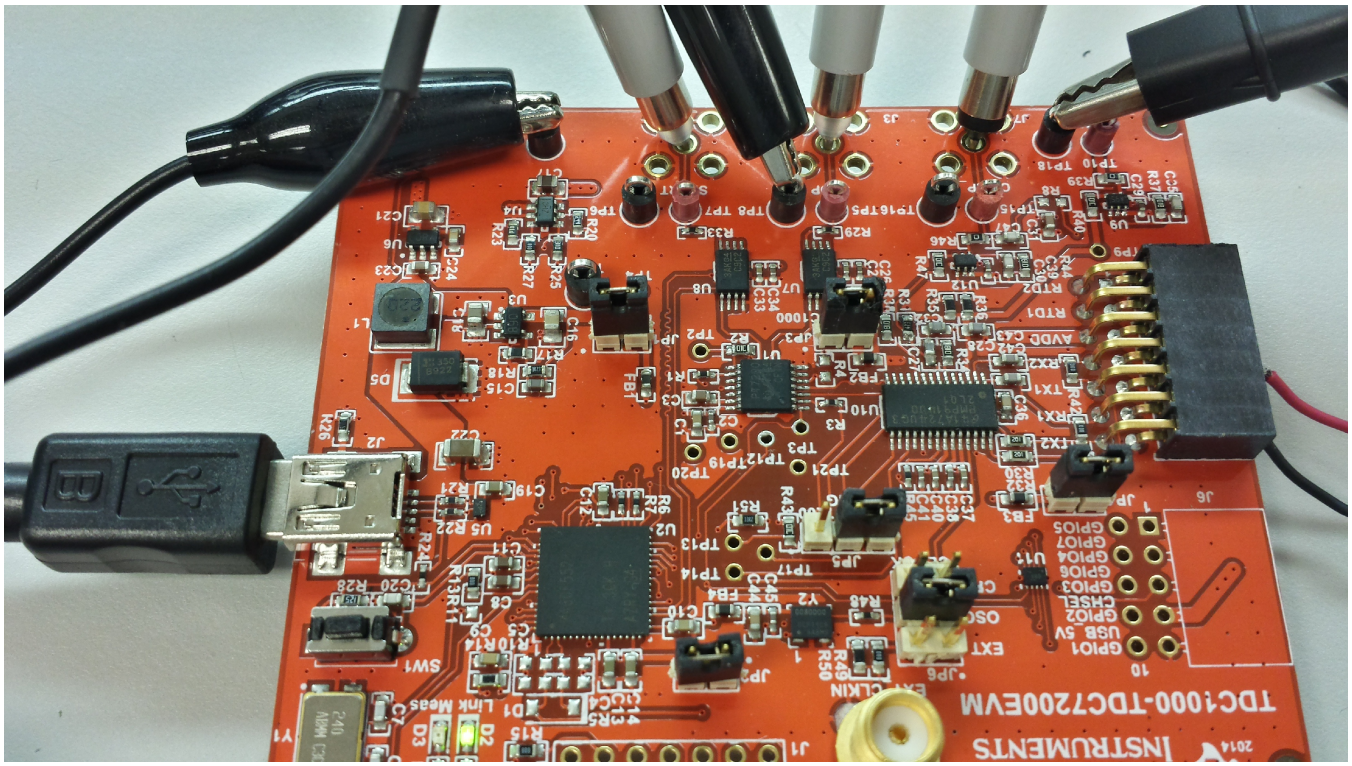

Figure 5-6. TDC1000-TDC7200EVM Board Connected to Oscilloscope

Copyright © 2014–2015, Texas Instruments Incorporated

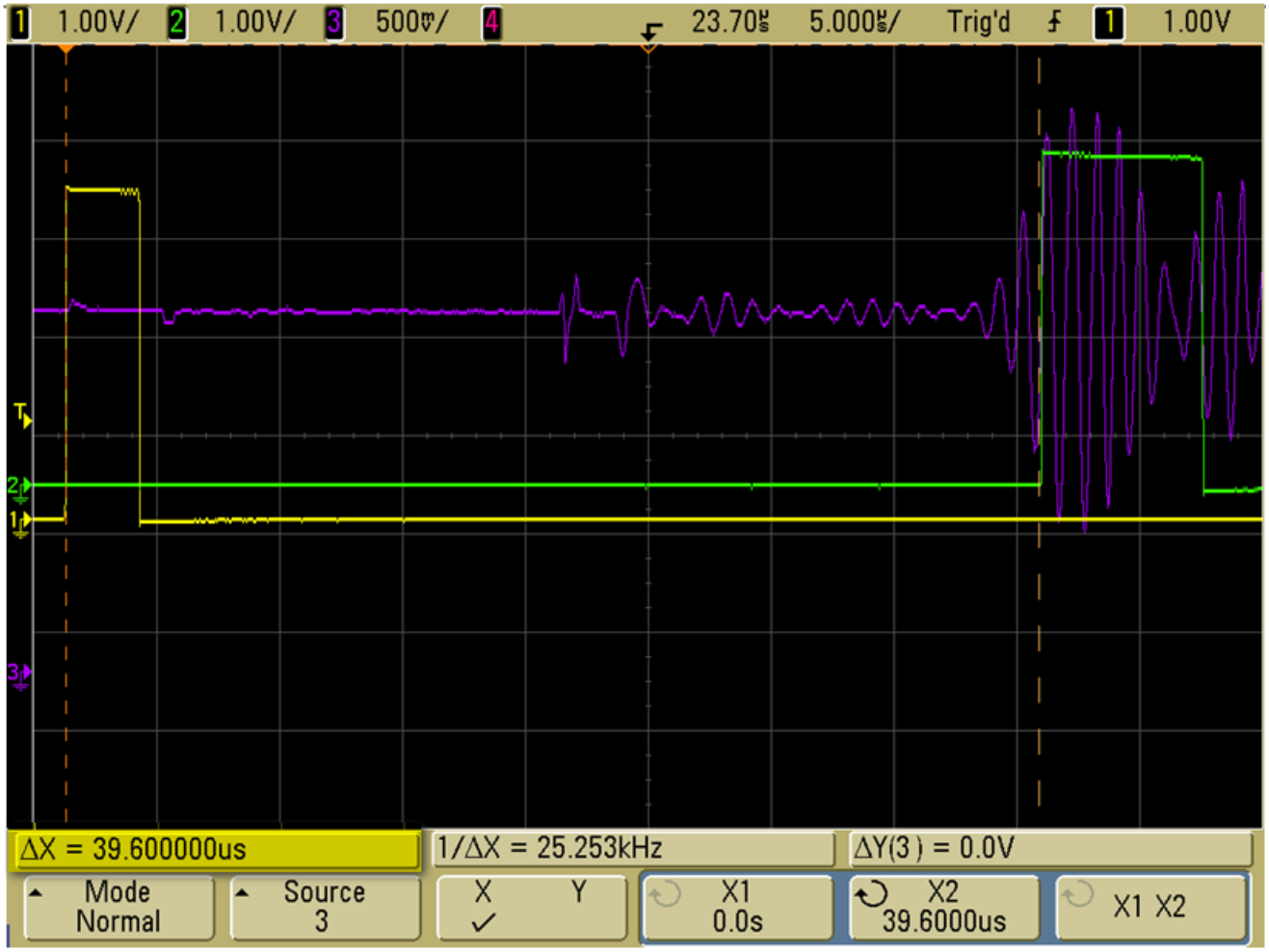

Figure 5-7. START and STOP Signals on Oscilloscope

6. Observe the START (yellow), STOP (Green), and COMP_IN (purple) signals on the oscilloscope and measure the time difference between the rising edge of the START signal to the rising edge of the STOP signal. Verify the time difference matches the TDC AVG VALUE on the GUI.
7. Find the width of the test cell with the following equations:

$$d = \frac{t}{2}v$$

- d: distance
- t: time of flight (TOF)
- v: speed of sound through the medium (water = 1484m/s at 20C.)

For example, the TOF of the test cell filled with water is 39.755 us, so d = (39.755us*1484 m/s) / 2 = 29.5 mm. The test cell is therefore 29.5 mm wide.

Copyright © 2014–2015, Texas Instruments Incorporated

Copyright © 2014–2015, Texas Instruments Incorporated

Troubleshooting

6.1 Jumpers

Table 6-1. Jumpers

Jumpers	Description
JP1	Connects VDD_TDC7200 to V3p3
JP2	Connects AVCC1 to V3p3
JP3	Connects AVDD to VDD
JP4	Connects V3p3 to VIO
JP5	Trigger source selector: MPS430 trigger or TDC7200 trigger
JP6	Oscillator source selector: i.e. CPU clock or external oscillator

For default operation, place jumpers on the following:

1. JP1.P3 and JP1.P4 - OSC
2. JP2.P2 and JP2.P3 - TRIG-CPU
3. JP3.P1 and JP3.P2 - AVDD
4. JP4.P1 and JP4.P2 – VIO
5. JP5.P1 and JP5.P2 – TDC7200 trigger
6. JP6.P3 and JP6.P4 – on-board OSCILLATOR as the clock source

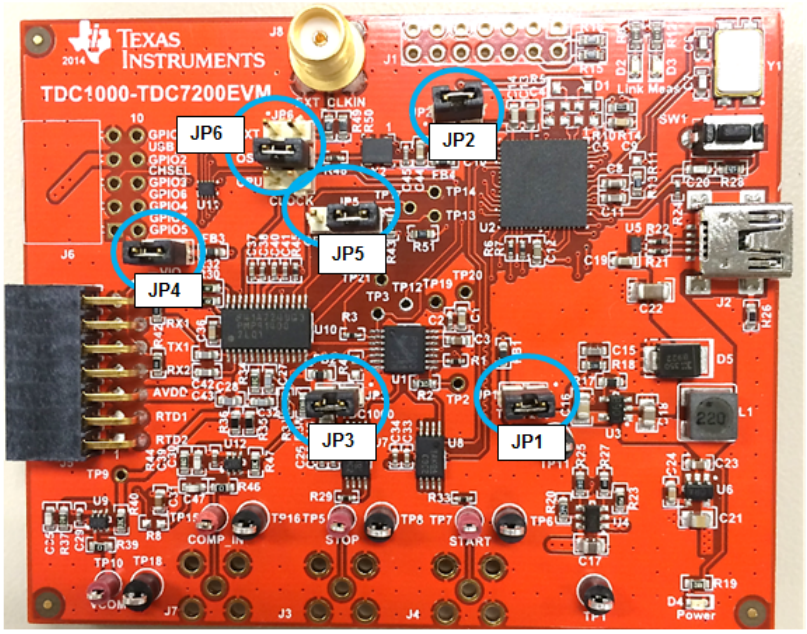

Figure 6-1. Jumpers

Copyright © 2014–2015, Texas Instruments Incorporated

6.2 LEDs

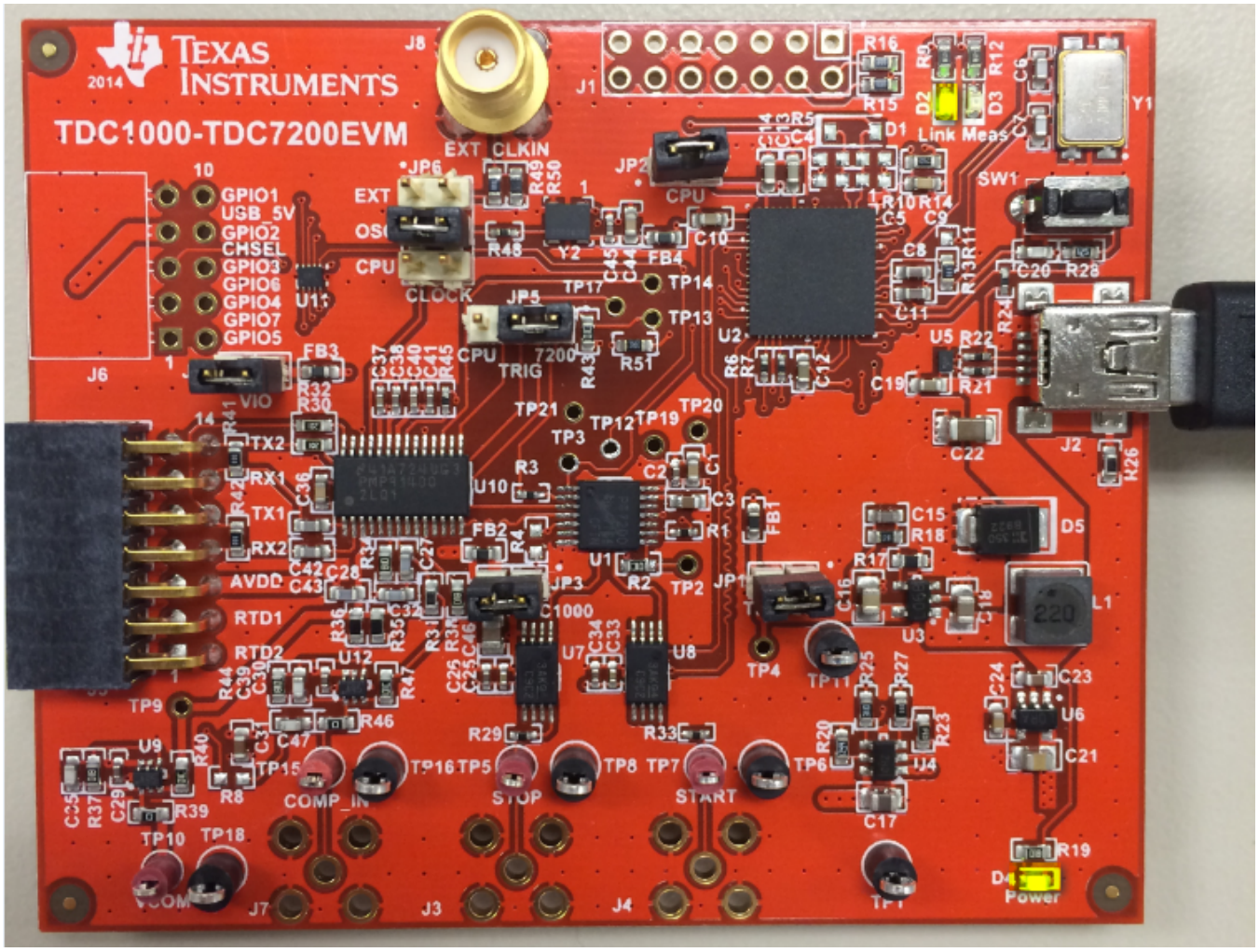

Figure 6-2. TDC1000-TDC7200EVM LEDs

1. The Power LED (D4) and Link (D2) are ON if the board is powered.
2. If the D4 and D2 are OFF, check the physical connection to the PC.
3. The LINK LED is ON if there is an established communication with the PC.
   (a) If the LINK LED is blinking when the EVM is connected to the PC without the GUI running, then the crystal oscillator has a fault.
   (b) If the LINK LED is OFF, check the physical connection to the PC then verify if the correct firmware has been downloaded if the jumpers have been connected correctly.

   Note: The LINK LED blinks during graphing mode.

6.3 Driver Errors

If there is a driver error when running the GUI, check the Device Manager for COM port name TDC1000_7200_EVM.

Copyright © 2014–2015, Texas Instruments Incorporated

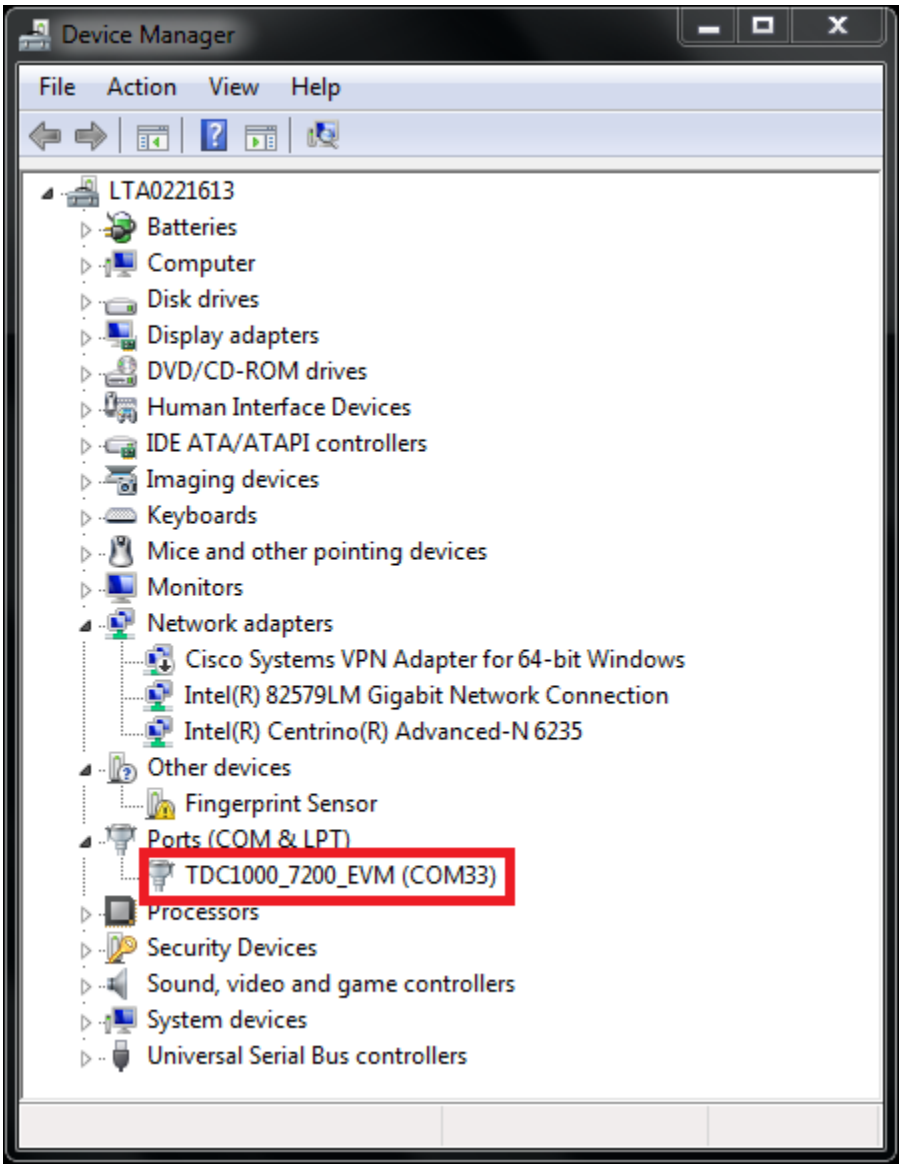

Figure 6-3. Device Manager with COM Port Name

If you do not see TDC1000_7200_EVM and instead see MSP430-USB Example, complete the following steps:

1. Open the Device Manager and find the MSP430-USB Example device.
2. Right-click and choose Update Driver Software.
3. Select Browse my Computer for driver installation. Navigate and select the folder containing the TDC1000_7200_EVM_DRIVER.inf file.
4. Close the setup window when the installation is complete. The Device Manager should now display TDC1000_7200_EVM followed by a COM port number. Take note of this number as it will be required to connect to the board from the GUI.

Copyright © 2014–2015, Texas Instruments Incorporated

Copyright © 2014–2015, Texas Instruments Incorporated

Firmware Upgrade

Note: This section is only necessary if the firmware needs to be changed. The TDC1000-TDC7200EVM comes preloaded with firmware already.

To change the firmware, complete the following steps:

1. Connect the TDC1000-TDC7200EVM to a PC.
2. Open the TDC1000-7200EVM GUI then go to the DEBUG tab. Press OK if a connection error window pops up. Click on the Update Firmware button.

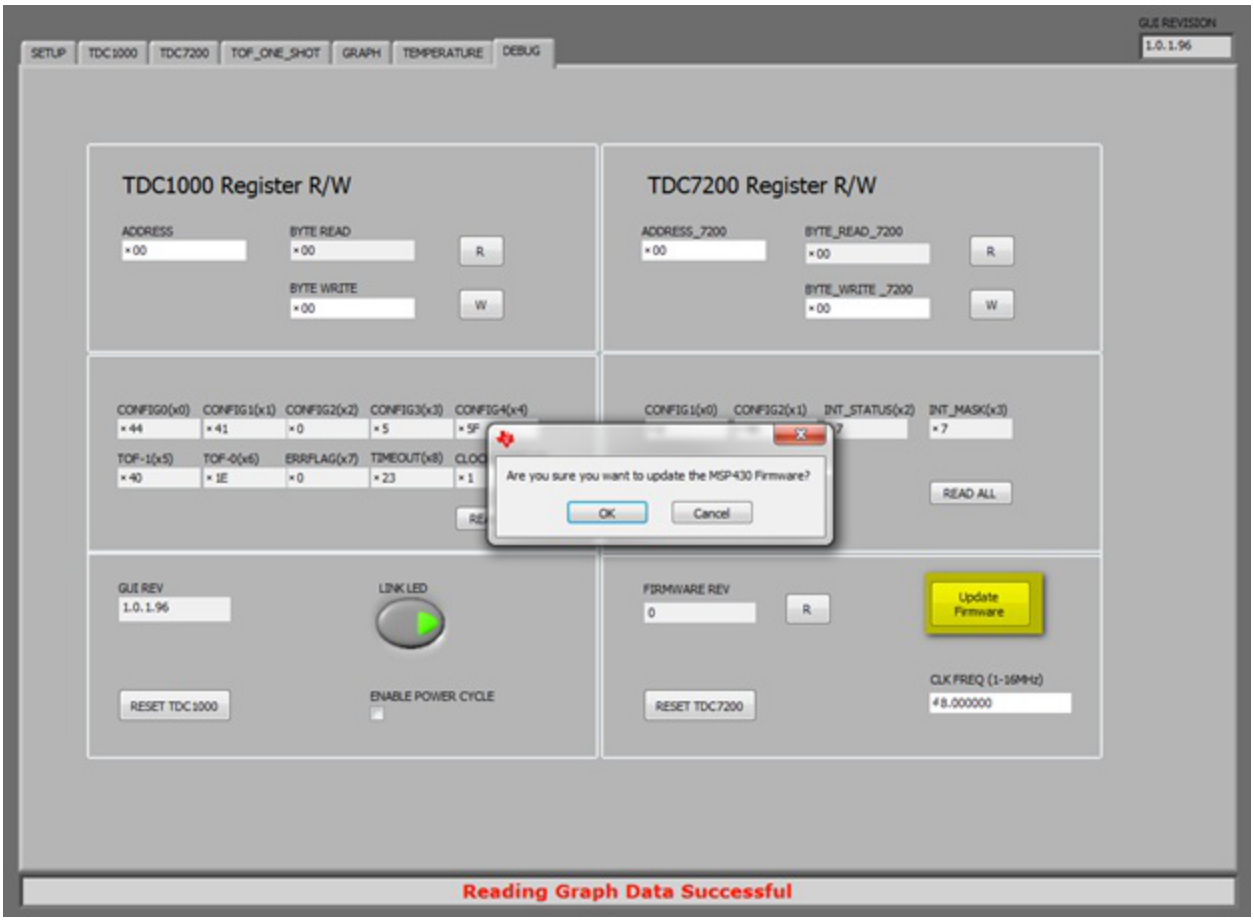

Figure 7-1. Connection Error Pop-up Window

3. The MSP430 USB Firmware Upgrade windows pops up. Click Next to proceed on the first prompt; read and accept the license agreement and click Next to continue.

Copyright © 2014–2015, Texas Instruments Incorporated

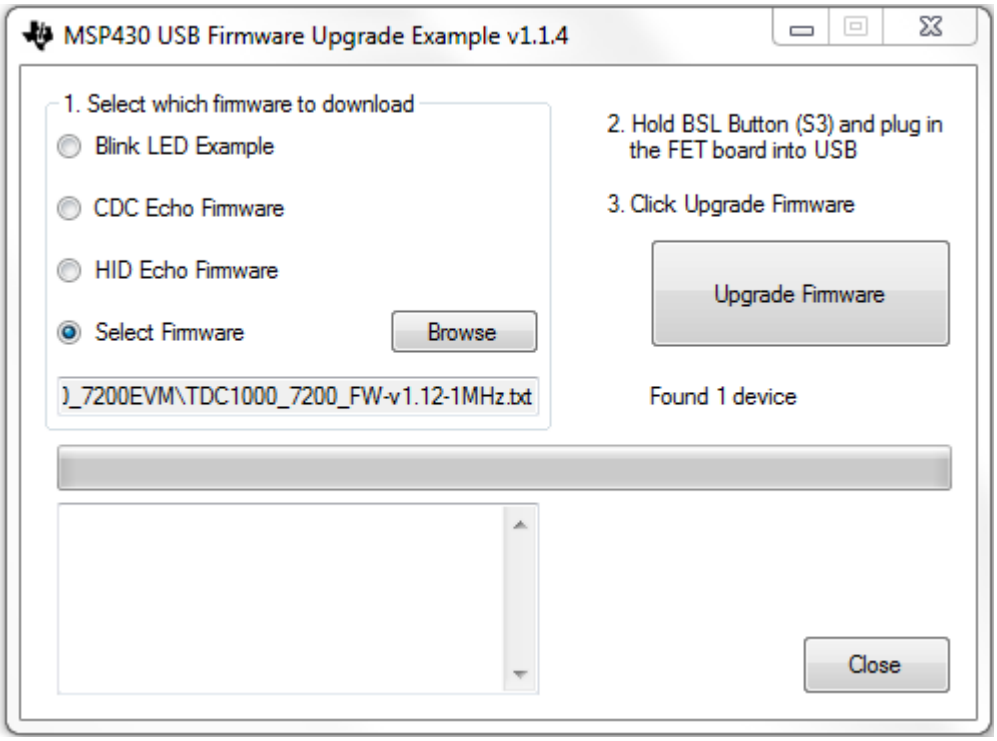

Figure 7-2. USB Firmware Upgrade Window

4. Disconnect and reconnect the LaunchPad to PC while holding down the BSL button.
5. Select the Select Firmware button and browse to the firmware file.
6. Click on the Upgrade Firmware button to program the EVM. Close the application when done and restart the TDC1000_7200EVM GUI.

Copyright © 2014–2015, Texas Instruments Incorporated

Copyright © 2014–2015, Texas Instruments Incorporated

Board Layout

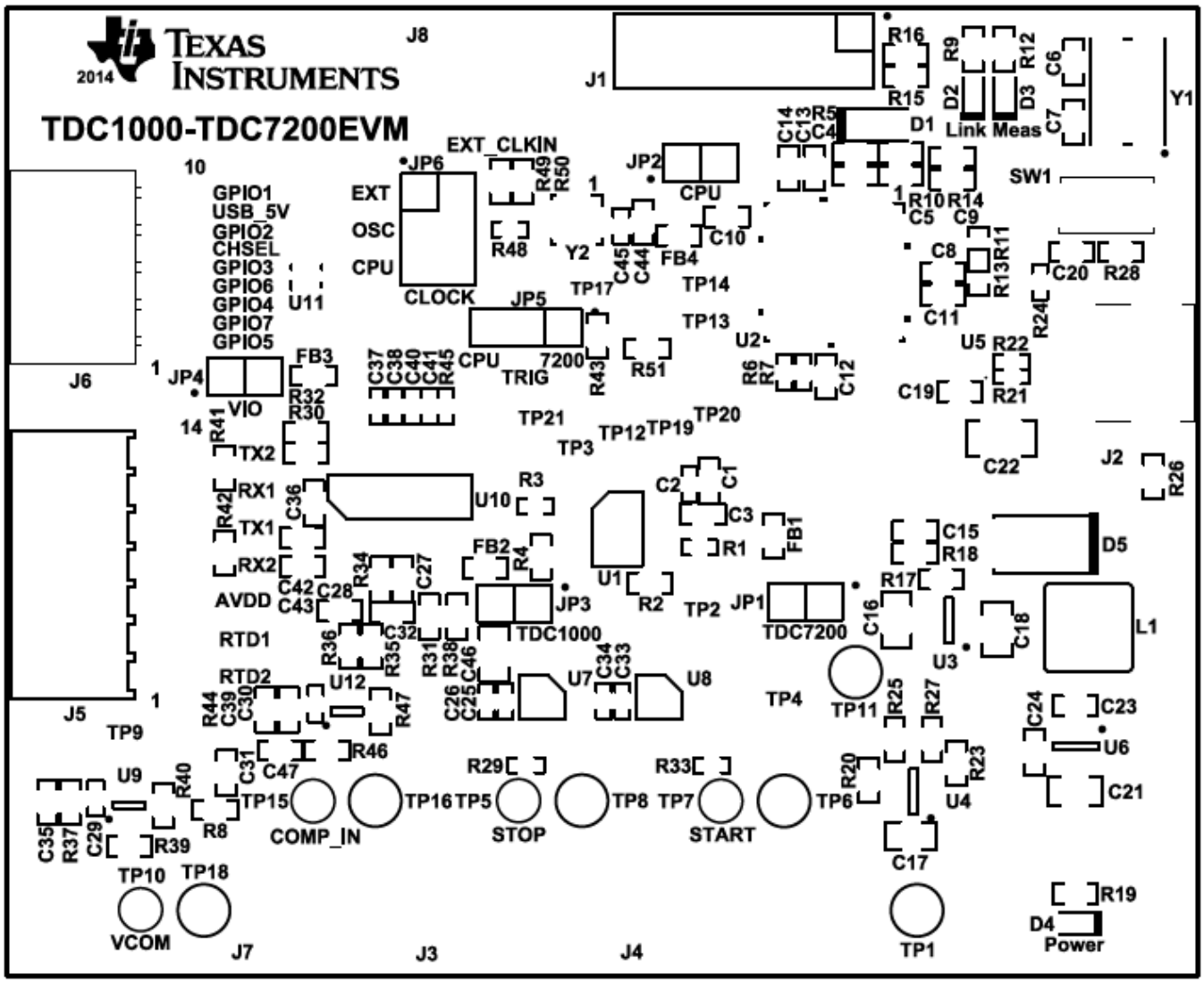

Figure 8-1. Top Overlay

Copyright © 2014–2015, Texas Instruments Incorporated

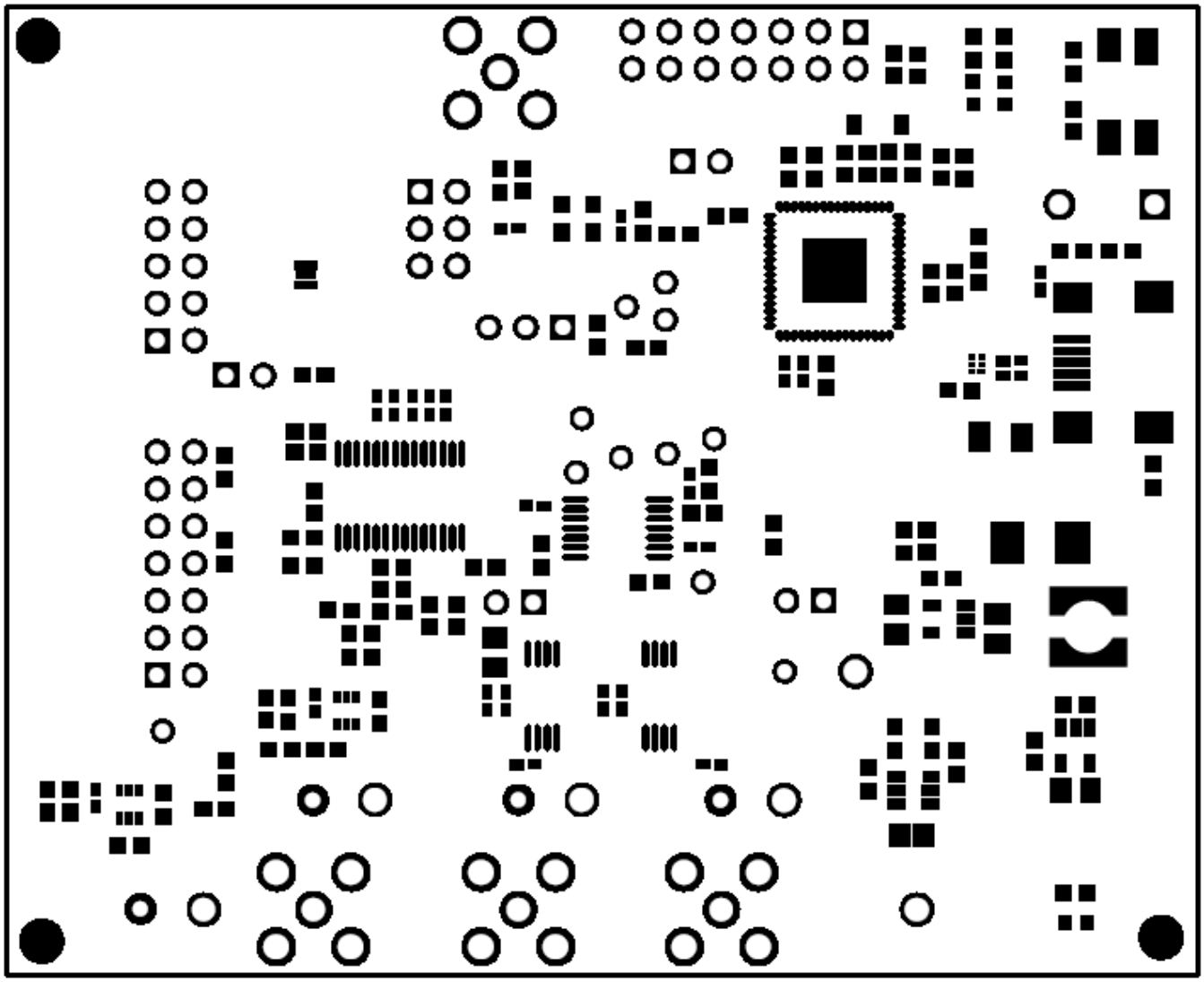

Figure 8-2. Top Solder Mask

Copyright © 2014–2015, Texas Instruments Incorporated

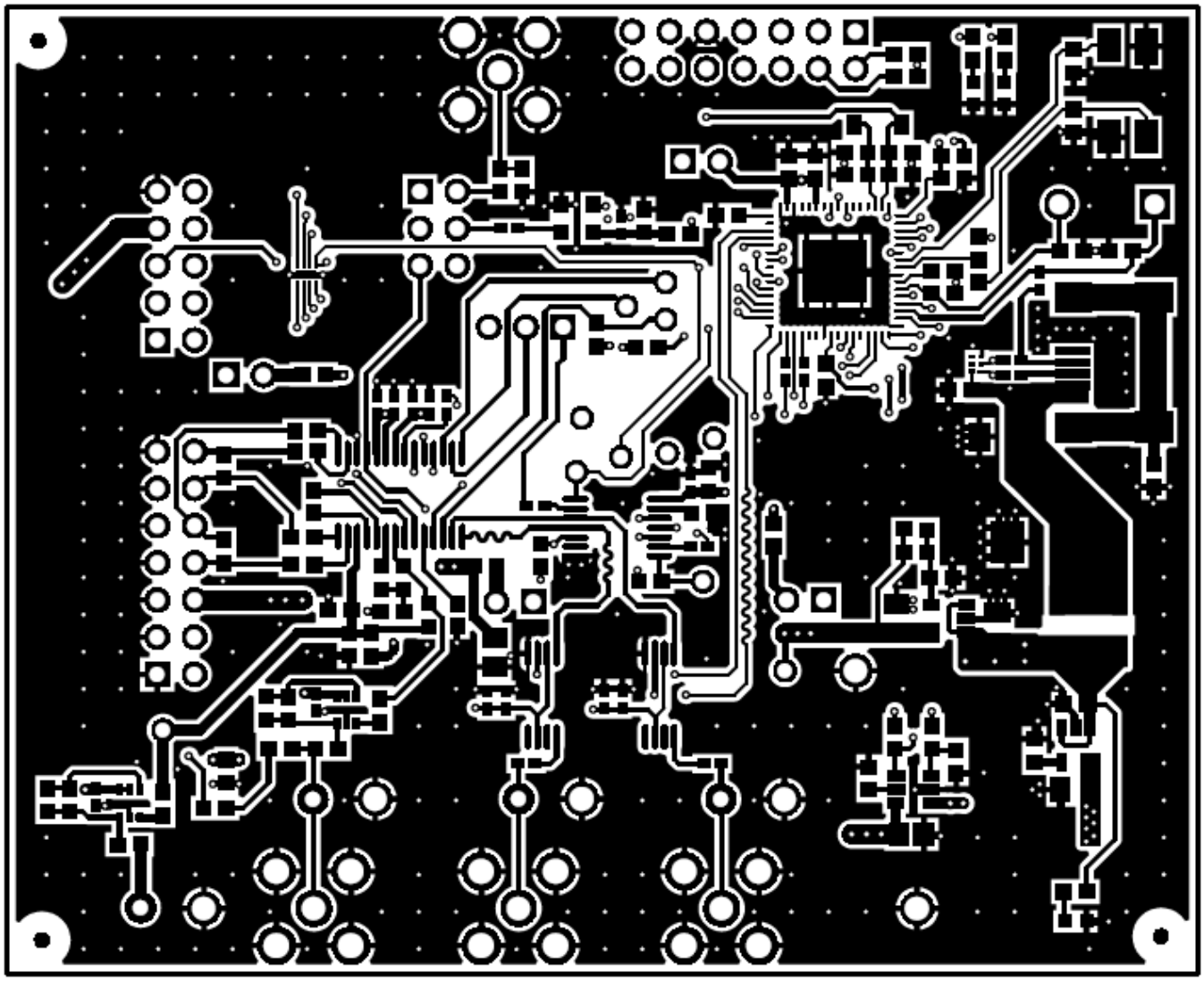

Figure 8-3. Top Layer

Copyright © 2014–2015, Texas Instruments Incorporated

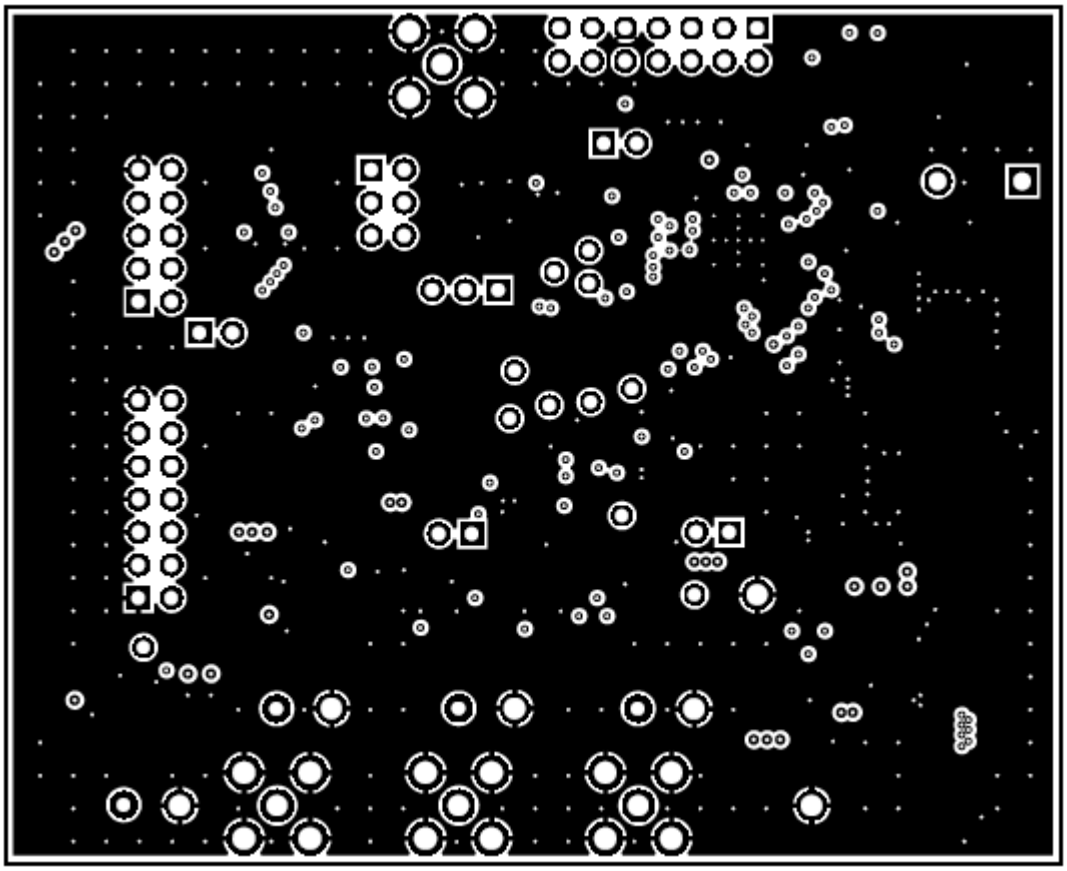

Figure 8-4. Mid Layer 1

Copyright © 2014–2015, Texas Instruments Incorporated

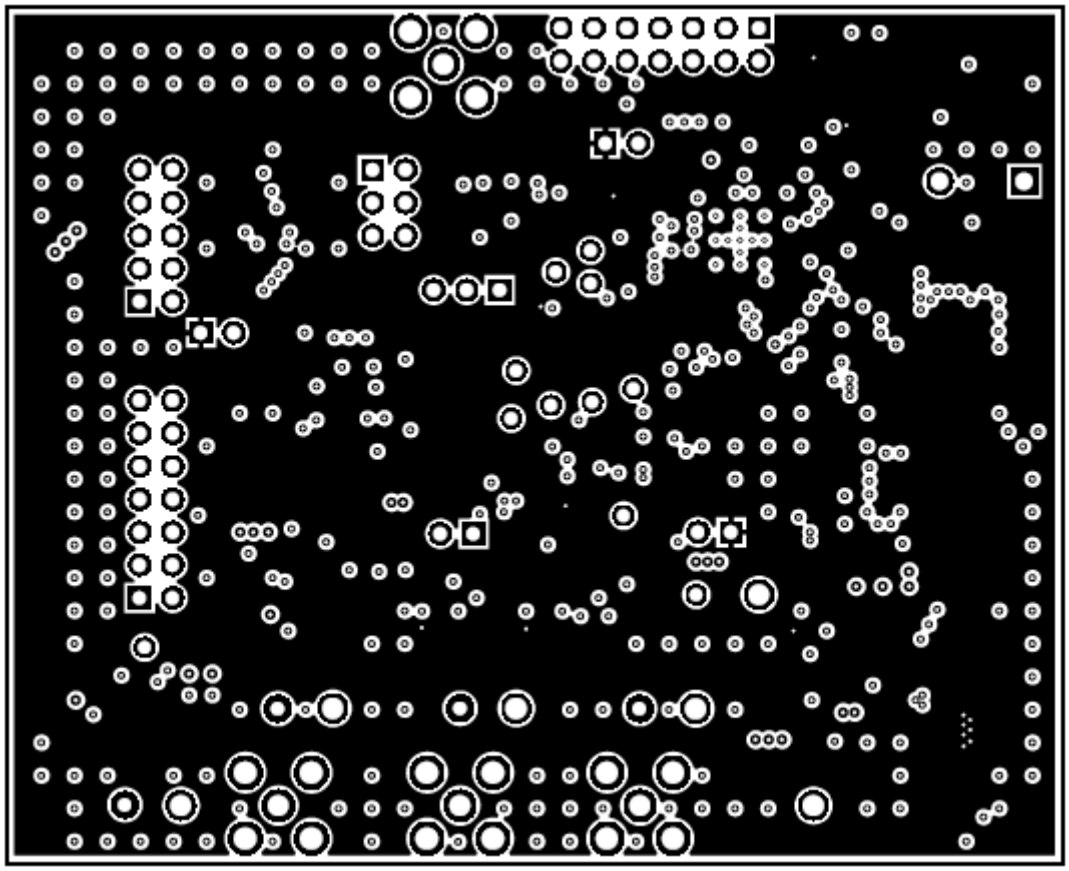

Figure 8-5. Mid Layer 2

Copyright © 2014–2015, Texas Instruments Incorporated

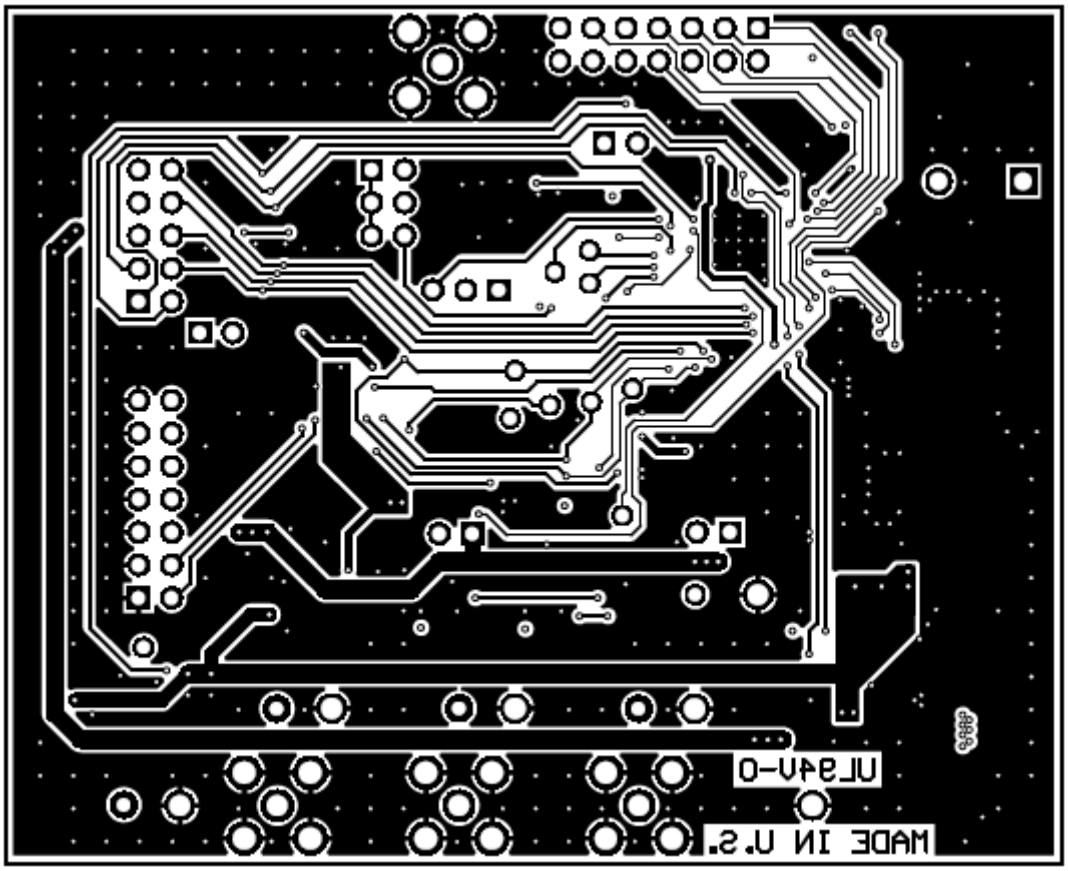

Figure 8-6. Bottom Layer

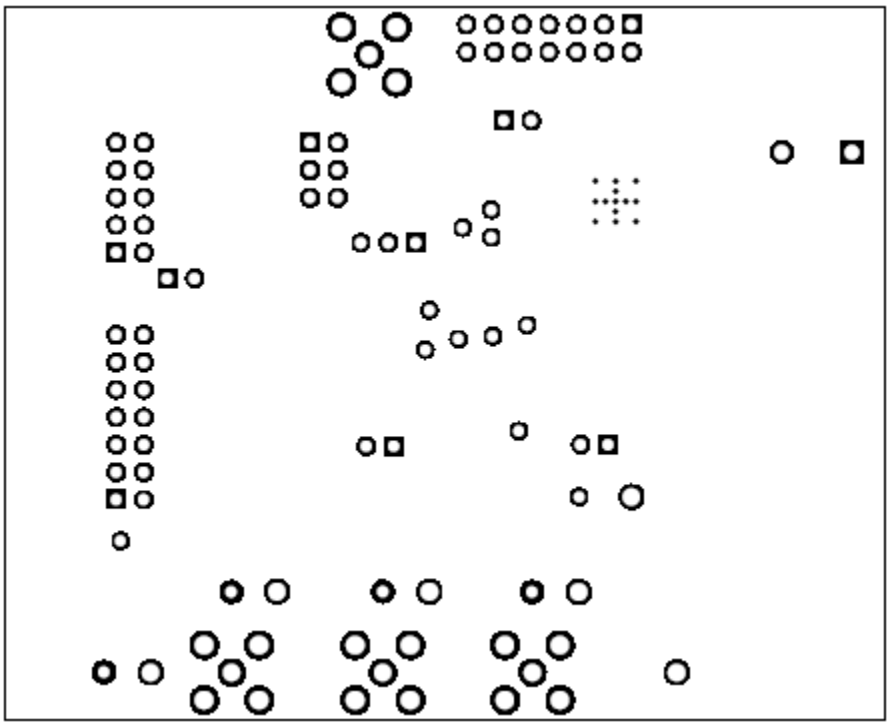

Figure 8-7. Bottom Solder Mask

Copyright © 2014–2015, Texas Instruments Incorporated

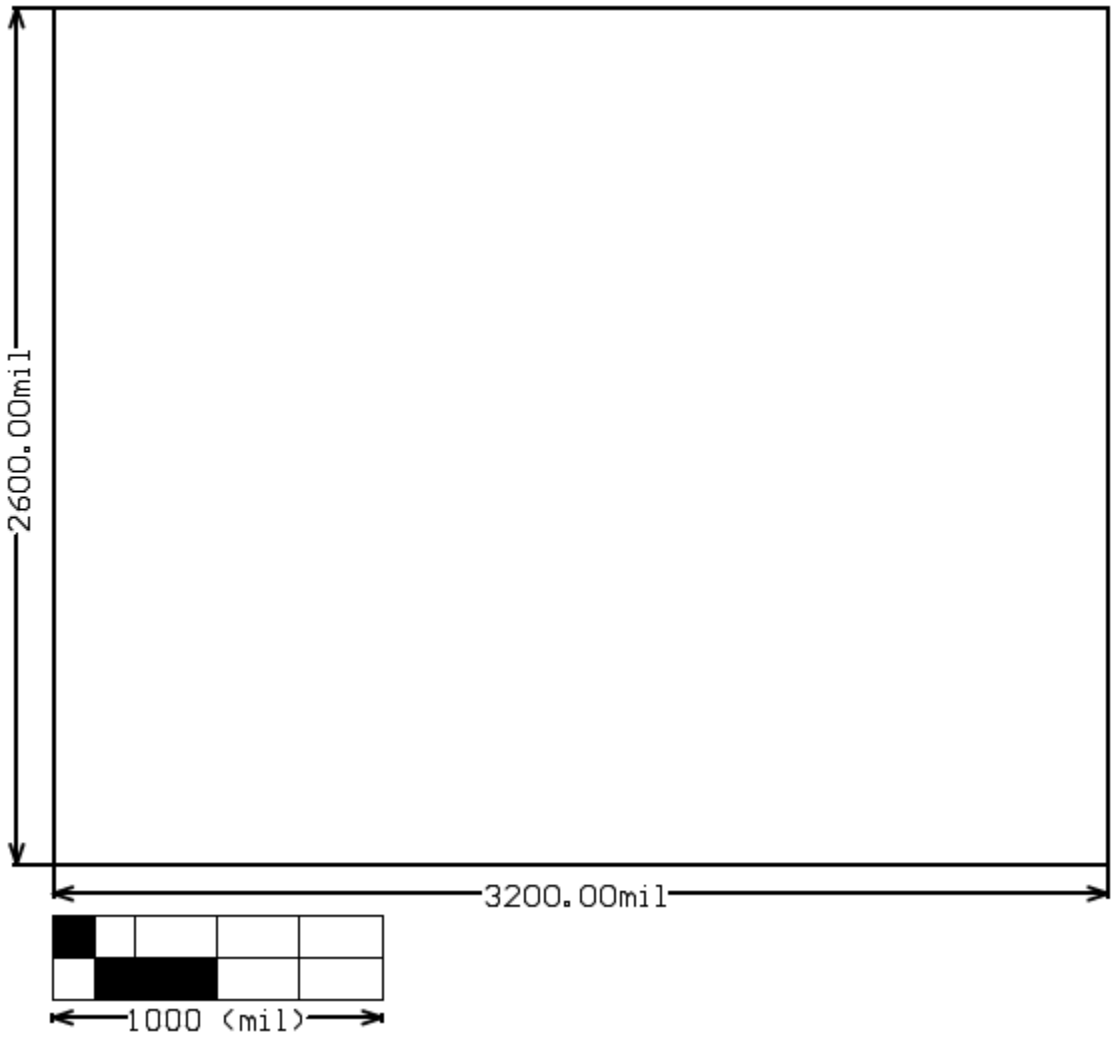

Figure 8-8. Board Dimensions

Copyright © 2014–2015, Texas Instruments Incorporated

Copyright © 2014–2015, Texas Instruments Incorporated

Schematic

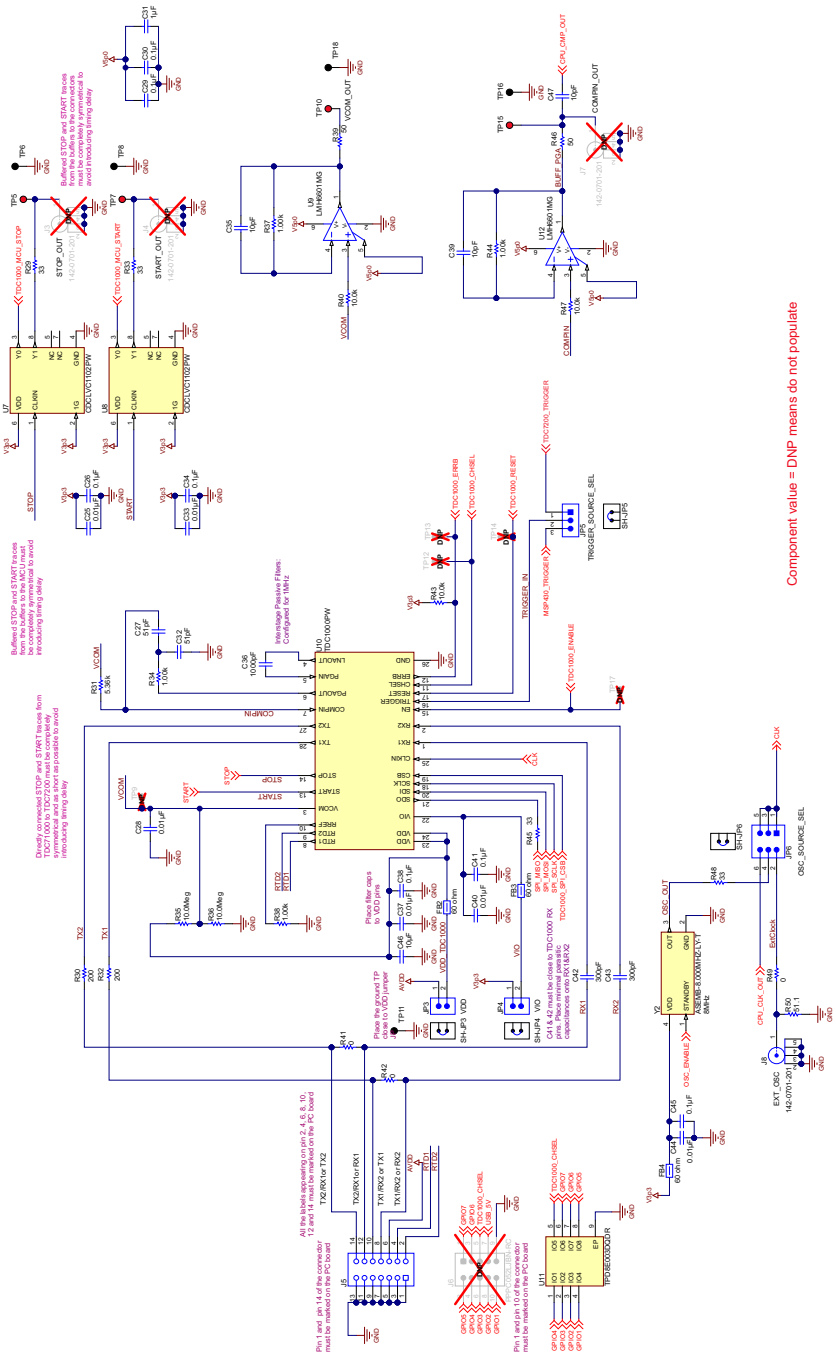

Figure 9-1. TDC1000-TDC7200EVM Schematic 1

Copyright © 2014–2015, Texas Instruments Incorporated

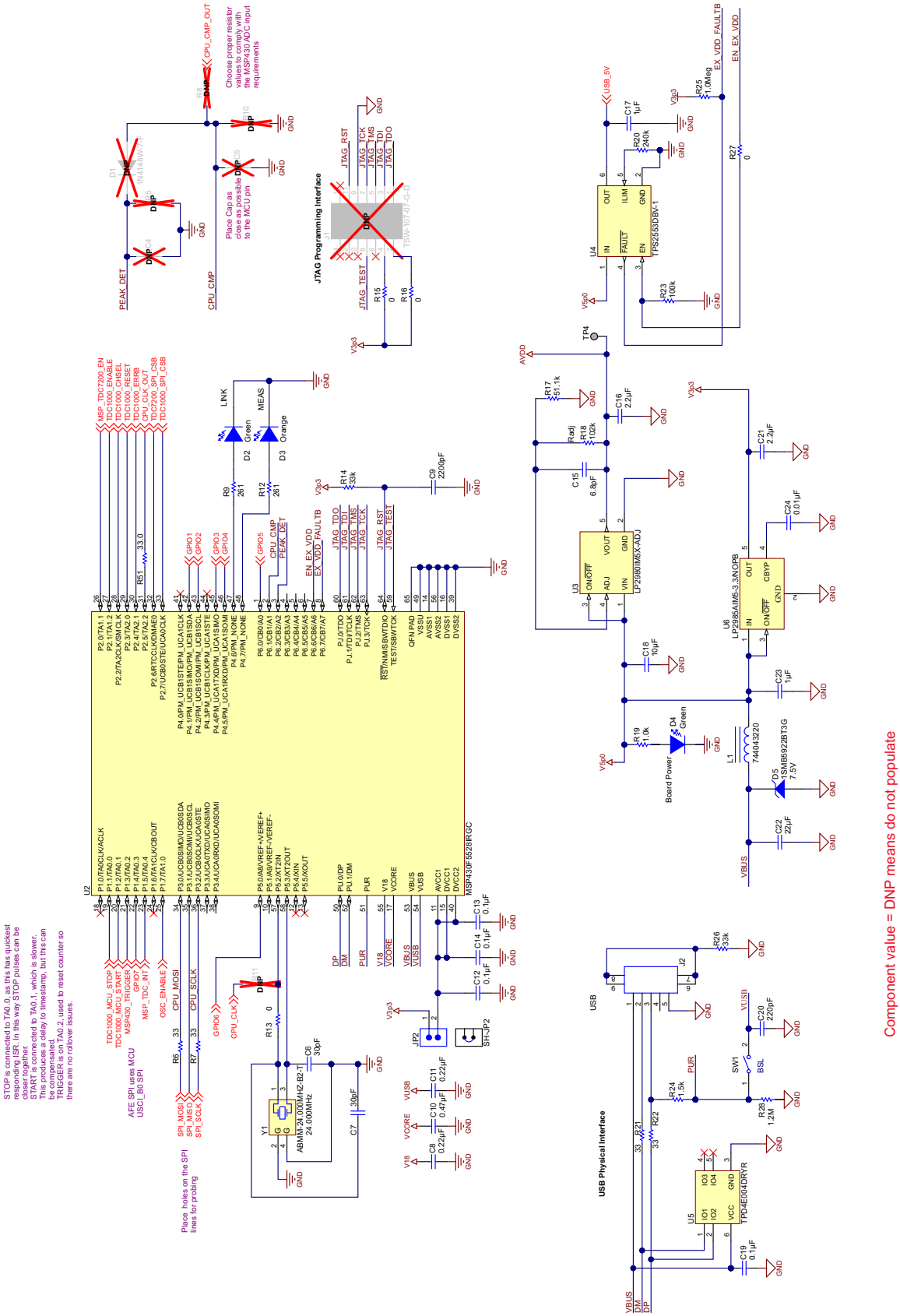

Figure 9-2. TDC1000-TDC7200EVM Schematic 2

Copyright © 2014–2015, Texas Instruments Incorporated

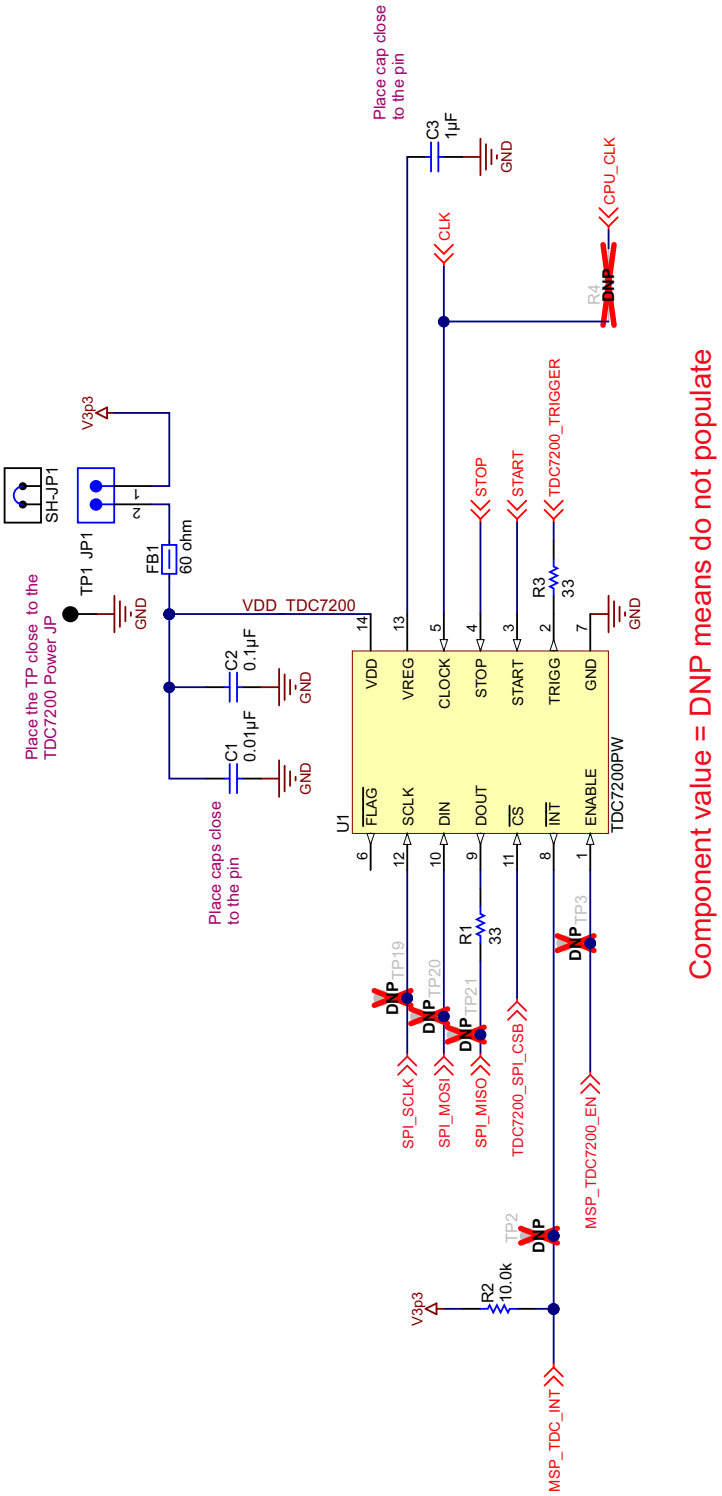

Figure 9-3. TDC1000-TDC7200EVM Schematic 3

Copyright © 2014–2015, Texas Instruments Incorporated

Copyright © 2014–2015, Texas Instruments Incorporated

Bill of Materials

Table 10-1. TDC1000-TDC7200EVM Bill of Materials

Designator	Description	Value	Manufacturer	Part Number
!PCB1	Printed Circuit Board		Any	SV601098
C1, C24, C44	CAP, CERM, 0.01 uF, 25 V, +/-10%, X7R, 0603	0.01 uF	MuRata	GRM188R71E103KA01D
C2, C26, C29, C30, C34, C38, C41, C45	CAP, CERM, 0.1 uF, 10 V, +/-10%, X5R, 0402	0.1 uF	TDK	C1005X5R1A104K
C3, C23, C31	CAP, CERM, 1 uF, 25 V, +/-10%, X7R, 0603	1 uF	MuRata	GRM188R71E105KA12D
C6, C7	CAP, CERM, 30 pF, 100 V, +/-5%, C0G/NP0, 0603	30 pF	MuRata	GRM1885C2A300JA01D
C8, C11	CAP, CERM, 0.22 uF, 25 V, +/-10%, X5R, 0603	0.22 uF	AVX	06033D224KAT2A
C9	CAP, CERM, 2200 pF, 50 V, +/-10%, X7R, 0603	2200 pF	Kemet	C0603X222K5RACTU
C10	CAP, CERM, 0.47 uF, 16 V, +/-10%, X7R, 0603	0.47 uF	MuRata	GRM188R71C474KA88D
C12, C13, C14, C19	CAP, CERM, 0.1 uF, 100 V, +/-10%, X7R, 0603	0.1 uF	MuRata	GRM188R72A104KA35D
C15	CAP, CERM, 6.8 pF, 50 V, +/-4%, C0G/NP0, 0603	6.8 pF	AVX	06035A6R8CAT2A
C16, C21	CAP, CERM, 2.2 uF, 16 V, +/-10%, X7R, 0805	2.2 uF	Kemet	C0805C225K4RACTU
C17	CAP, CERM, 1 uF, 16 V, +/-10%, X5R, 0805	1 uF	AVX	0805YD105KAT2A
C18, C46	CAP, CERM, 10 uF, 10 V, +/-10%, X5R, 0805	10 uF	Kemet	C0805C106K8PACTU
C20	CAP, CERM, 220 pF, 50 V, +/-1%, C0G/NP0, 0603	220 pF	AVX	06035A221FAT2A
C22	CAP, CERM, 22 uF, 16 V, +/-20%, X5R, 1206	22 uF	AVX	1206YD226MAT2A
C25, C33, C37, C40	CAP, CERM, 0.01 uF, 10 V, +/-10%, X5R, 0402	0.01 uF	MuRata	GRM155R61A103KA01D
C27, C32	CAP, CERM, 51 pF, 100 V, +/-5%, C0G/NP0, 0603	51 pF	MuRata	GRM1885C2A510JA01D
C28	CAP, CERM, 0.01 uF, 25 V, +/-5%, C0G/NP0, 0603	0.01 uF	TDK	C1608C0G1E103J

Copyright © 2014–2015, Texas Instruments Incorporated

Table 10-1. TDC1000-TDC7200EVM Bill of Materials (continued)

Designator	Description	Value	Manufacturer	Part Number
C35, C39, C47	CAP, CERM, 10 pF, 50 V, +/-5%, C0G/NP0, 0603	10 pF	AVX	06035A100JAT2A
C36	CAP, CERM, 1000 pF, 50 V, +/- 5%, C0G/NP0, 0603	1000 pF	TDK	C1608C0G1H102J
C42, C43	CAP, CERM, 300 pF, 50 V, +/-5%, C0G/NP0, 0603	300 pF	MuRata	GRM1885C1H301JA01D
D2, D4	LED, Green, SMD	Green	Lite-On	LTST-C190GKT
D3	LED, Orange, SMD	Orange	Lite-On	LTST-C190KFKT
D5	Diode, Zener, 7.5 V, 550 mW, SMB	7.5 V	ON Semiconductor	1SMB5922BT3G
FB1, FB2, FB3, FB4	0.8A Ferrite Bead, 60 ohm @ 100MHz, SMD	60 ohm	Taiyo Yuden	BK1608HS600-T
H1, H2, H3, H4	Bumpon, Cylindrical, 0.312 X 0.200, Black		3M	SJ61A1
J2	MINI USB 2.0 SMT TYPE AB 5 CONTACTS R/A, SMD		Wurth Elektronik eiSos	651-305-142-821
J5	Receptacle, 7x2, 2.54 mm, R/A, TH		Samtec	SSW-107-02-G-D-RA
J8	Connector, TH, SMA		Emerson Network Power	142-0701-201
JP1, JP2, JP3, JP4	Header, TH, 100mil, 2x1, Gold plated, 230 mil above insulator		Samtec	TSW-102-07-G-S
JP5	Header, TH, 100mil, 3x1, Gold plated, 230 mil above insulator		Samtec	TSW-103-07-G-S
JP6	Header, TH, 100mil, 3x2, Gold plated, 230 mil above insulator		Samtec	TSW-103-07-G-D
L1	Inductor, Shielded Drum Core, Ferrite, 22 uH, 0.7 A, 0.155 ohm, SMD	22 uH	Wurth Elektronik eiSos	744043220
LBL1	Thermal Transfer Printable Labels, 0.650" W x 0.200" H - 10,000 per roll		Brady	THT-14-423-10
R1, R3, R6, R7, R21, R22, R29, R33, R45, R48	RES, 33 ohm, 5%, 0.063W, 0402	33	Vishay-Dale	CRCW040233R0JNED
R2, R40, R43, R47	RES, 10.0k ohm, 1%, 0.1W, 0603	10.0k	Yageo America	RC0603FR-0710KL
R9, R12	RES, 261 ohm, 1%, 0.1W, 0603	261	Vishay-Dale	CRCW0603261RFKEA
R13, R15, R16, R27, R41, R42, R49	RES, 0 ohm, 5%, 0.1W, 0603	0	Vishay-Dale	CRCW06030000Z0EA
R14, R26	RES, 33k ohm, 5%, 0.1W, 0603	33k	Vishay-Dale	CRCW060333K0JNEA
R17	RES, 51.1k ohm, 1%, 0.1W, 0603	51.1k	Vishay-Dale	CRCW060351K1FKEA
R18	RES, 102k ohm, 1%, 0.1W, 0603	102k	Vishay-Dale	CRCW0603102KFKEA
R19	RES, 1.0k ohm, 5%, 0.1W, 0603	1.0k	Vishay-Dale	CRCW06031K00JNEA

Copyright © 2014–2015, Texas Instruments Incorporated

Table 10-1. TDC1000-TDC7200EVM Bill of Materials (continued)

Designator	Description	Value	Manufacturer	Part Number
R20	RES, 240k ohm, 5%, 0.1W, 0603	240k	Vishay-Dale	CRCW0603240KJNEA
R23	RES, 100k ohm, 5%, 0.1W, 0603	100k	Vishay-Dale	CRCW0603100KJNEA
R24	RES, 1.5k ohm, 5%, 0.063W, 0402	1.5k	Vishay-Dale	CRCW04021K50JNED
R25	RES, 1.0Meg ohm, 5%, 0.1W, 0603	1.0 Meg	Vishay-Dale	CRCW06031M00JNEA
R28	RES, 1.2Meg ohm, 5%, 0.1W, 0603	1.2 M	Vishay-Dale	CRCW06031M20JNEA
R30, R32	RES, 200 ohm, 0.1%, 0.1W, 0603	200	Susumu Co Ltd	RG1608P-201-B-T5
R31	RES, 5.36k ohm, 1%, 0.1W, 0603	5.36k	Vishay-Dale	CRCW06035K36FKEA
R34, R37, R38, R44	RES, 1.00k ohm, 1%, 0.1W, 0603	1.00k	Vishay-Dale	CRCW06031K00FKEA
R35, R36	RES, 10.0Meg ohm, 1%, 0.1W, 0603	10.0 Meg	Vishay-Dale	CRCW060310M0FKEA
R39, R46	RES, 0 ohm, 5%, 0.1W, 0603	50	Vishay-Dale	CRCW06030000Z0EA
R50	RES, 51.1 ohm, 1%, 0.1W, 0603	51.1	Vishay-Dale	CRCW060351R1FKEA
R51	RES, 33.0 ohm, 1%, 0.1W, 0603	33.0	Vishay-Dale	CRCW060333R0FKEA
SH-JP1, SH-JP2, SH-JP3, SH-JP4, SH-JP5, SH-JP6	Shunt, 100mil, Gold plated, Black	1x2	3M	969102-0000-DA
SW1	Switch, Tactile, SPST-NO, 0.05A, 12 V, TH		C&K Components	PTS635SL50LFS
TP1, TP6, TP8, TP11, TP16, TP18	Test Point, TH, Compact, Black	Black	Keystone	5006
TP5, TP7, TP10, TP15	Test Point, Miniature, Red, TH	Red	Keystone	5000
U1	STOPWATCH IC FOR TIME MEASUREMENT BETWEEN TWO EVENTS, PW0014A		Texas Instruments	TDC7200PW
U2	Mixed Signal MicroController, RGC0064B		Texas Instruments	MSP430F5528IRGC
U3	Micropower 50 mA Ultra Low-Dropout Adjustable Voltage Regulator, 5-pin SOT-23		Texas Instruments	LP2980IM5X-ADJ
U4	PRECISION ADJUSTABLE CURRENT-LIMITED POWER-DISTRIBUTION SWITCHES, DBV0006A		Texas Instruments	TPS2553DBV-1
U5	ESD-Protection Array for High-Speed Data Interfaces, 4 Channels, -40 to +85 degC, 6-pin SON (DRY), Green (RoHS & no Sb/Br)		Texas Instruments	TPD4E004DRYR

Copyright © 2014–2015, Texas Instruments Incorporated

Table 10-1. TDC1000-TDC7200EVM Bill of Materials (continued)

Designator	Description	Value	Manufacturer	Part Number
U6	Micropower 150 mA Low-Noise Ultra Low-Dropout Regulator, 5-pin SOT-23, Pb-Free		Texas Instruments	LP2985AIM5-3.3/NOPB
U7, U8	3.3 V and 2.5 V LVCMOS High-Performance Clock Buffer Family, PW0008A		Texas Instruments	CDCLVC1102PW
U9, U12	2.4V R-R Out CMOS Video Op Amp with Shutdown	LMH6601MG	Texas Instruments	LMH6601MG
U10	TDC1000 Precision AFE for Time of Flight, PW0028A		Texas Instruments	TDC1000PW
U11	ESD Array For Portable Space-Saving Applications, 8 Channels, -40 to +85 degC, 8-pin WSON (DQD), Green (RoHS & no Sb/Br)		Texas Instruments	TPD8E003DQDR
Y1	Crystal, 24.000 MHz, 18 pF, SMD		Abracon Corportation	ABMM-24.000MHZ-B2-T
Y2	OSC, 8 MHz, 1.8 - 3.3 V, SMD		Abracon Corportation	ASEMB-8.000MHZ-LY-T
C4, C5	CAP, CERM, 2200 pF, 50 V, +/-10%, X7R, 0603	2200 pF	Kemet	C0603X222K5RACTU
D1	Diode, Ultrafast, 100 V, 0.15 A, SOD-123	100 V	Diodes Inc.	1N4148W-7-F
FID1, FID2, FID3	Fiducial mark. There is nothing to buy or mount.		N/A	N/A
J1	Header, TH, 100mil, 7x2, Gold plated, 230 mil above insulator		Samtec Inc.	TSW-107-07-G-D
J3, J4, J7	Connector, TH, SMA		Emerson Network Power	142-0701-201
J6	Connector, Receptacle, 100mil, 5x2, Gold plated, R/A, TH		Sullins Connector Solutions	PPPC052LJBN-RC
R4, R11	RES, 0 ohm, 5%, 0.1W, 0603	0	Vishay-Dale	CRCW06030000Z0EA
R5, R8, R10	RES, 1.05k ohm, 1%, 0.1W, 0603	1.05k	Vishay-Dale	CRCW06031K05FKEA

Copyright © 2014–2015, Texas Instruments Incorporated

Copyright © 2014–2015, Texas Instruments Incorporated

Revision History

Changes from Original (October 2014) to A Revision	Page
• Added info about transducer that is now included in the EVM kit.	5

NOTE: Page numbers for previous revisions may differ from page numbers in the current version.

Copyright © 2014–2015, Texas Instruments Incorporated

STANDARD TERMS AND CONDITIONS FOR EVALUATION MODULES

1. *Delivery:* TI delivers TI evaluation boards, kits, or modules, including any accompanying demonstration software, components, or documentation (collectively, an “EVM” or “EVMs”) to the User (“User”) in accordance with the terms and conditions set forth herein. Acceptance of the EVM is expressly subject to the following terms and conditions.

   1.1 EVMs are intended solely for product or software developers for use in a research and development setting to facilitate feasibility evaluation, experimentation, or scientific analysis of TI semiconductors products. EVMs have no direct function and are not finished products. EVMs shall not be directly or indirectly assembled as a part or subassembly in any finished product. For clarification, any software or software tools provided with the EVM (“Software”) shall not be subject to the terms and conditions set forth herein but rather shall be subject to the applicable terms and conditions that accompany such Software

   1.2 EVMs are not intended for consumer or household use. EVMs may not be sold, sublicensed, leased, rented, loaned, assigned, or otherwise distributed for commercial purposes by Users, in whole or in part, or used in any finished product or production system.

2 *Limited Warranty and Related Remedies/Disclaimers*:

   2.1 These terms and conditions do not apply to Software. The warranty, if any, for Software is covered in the applicable Software License Agreement.

   2.2 TI warrants that the TI EVM will conform to TI's published specifications for ninety (90) days after the date TI delivers such EVM to User. Notwithstanding the foregoing, TI shall not be liable for any defects that are caused by neglect, misuse or mistreatment by an entity other than TI, including improper installation or testing, or for any EVMs that have been altered or modified in any way by an entity other than TI. Moreover, TI shall not be liable for any defects that result from User's design, specifications or instructions for such EVMs. Testing and other quality control techniques are used to the extent TI deems necessary or as mandated by government requirements. TI does not test all parameters of each EVM.

   2.3 If any EVM fails to conform to the warranty set forth above, TI's sole liability shall be at its option to repair or replace such EVM, or credit User's account for such EVM. TI's liability under this warranty shall be limited to EVMs that are returned during the warranty period to the address designated by TI and that are determined by TI not to conform to such warranty. If TI elects to repair or replace such EVM, TI shall have a reasonable time to repair such EVM or provide replacements. Repaired EVMs shall be warranted for the remainder of the original warranty period. Replaced EVMs shall be warranted for a new full ninety (90) day warranty period.

3 *Regulatory Notices:*

   3.1 *United States*

      3.1.1 *Notice applicable to EVMs not FCC-Approved:*

      This kit is designed to allow product developers to evaluate electronic components, circuitry, or software associated with the kit to determine whether to incorporate such items in a finished product and software developers to write software applications for use with the end product. This kit is not a finished product and when assembled may not be resold or otherwise marketed unless all required FCC equipment authorizations are first obtained. Operation is subject to the condition that this product not cause harmful interference to licensed radio stations and that this product accept harmful interference. Unless the assembled kit is designed to operate under part 15, part 18 or part 95 of this chapter, the operator of the kit must operate under the authority of an FCC license holder or must secure an experimental authorization under part 5 of this chapter.

      3.1.2 *For EVMs annotated as FCC – FEDERAL COMMUNICATIONS COMMISSION Part 15 Compliant:*

      CAUTION

      This device complies with part 15 of the FCC Rules. Operation is subject to the following two conditions: (1) This device may not cause harmful interference, and (2) this device must accept any interference received, including interference that may cause undesired operation.

      Changes or modifications not expressly approved by the party responsible for compliance could void the user's authority to operate the equipment.

      FCC Interference Statement for Class A EVM devices

      NOTE: This equipment has been tested and found to comply with the limits for a Class A digital device, pursuant to part 15 of the FCC Rules. These limits are designed to provide reasonable protection against harmful interference when the equipment is operated in a commercial environment. This equipment generates, uses, and can radiate radio frequency energy and, if not installed and used in accordance with the instruction manual, may cause harmful interference to radio communications. Operation of this equipment in a residential area is likely to cause harmful interference in which case the user will be required to correct the interference at his own expense.

FCC Interference Statement for Class B EVM devices

NOTE: This equipment has been tested and found to comply with the limits for a Class B digital device, pursuant to part 15 of the FCC Rules. These limits are designed to provide reasonable protection against harmful interference in a residential installation. This equipment generates, uses and can radiate radio frequency energy and, if not installed and used in accordance with the instructions, may cause harmful interference to radio communications. However, there is no guarantee that interference will not occur in a particular installation. If this equipment does cause harmful interference to radio or television reception, which can be determined by turning the equipment off and on, the user is encouraged to try to correct the interference by one or more of the following measures:

- *Reorient or relocate the receiving antenna.*
- *Increase the separation between the equipment and receiver.*
- *Connect the equipment into an outlet on a circuit different from that to which the receiver is connected.*
- *Consult the dealer or an experienced radio/TV technician for help.*

3.2 *Canada*

3.2.1 *For EVMs issued with an Industry Canada Certificate of Conformance to RSS-210*

Concerning EVMs Including Radio Transmitters:

This device complies with Industry Canada license-exempt RSS standard(s). Operation is subject to the following two conditions: (1) this device may not cause interference, and (2) this device must accept any interference, including interference that may cause undesired operation of the device.

Concernant les EVMs avec appareils radio:

Le présent appareil est conforme aux CNR d'Industrie Canada applicables aux appareils radio exempts de licence. L'exploitation est autorisée aux deux conditions suivantes: (1) l'appareil ne doit pas produire de brouillage, et (2) l'utilisateur de l'appareil doit accepter tout brouillage radioélectrique subi, même si le brouillage est susceptible d'en compromettre le fonctionnement.

Concerning EVMs Including Detachable Antennas:

Under Industry Canada regulations, this radio transmitter may only operate using an antenna of a type and maximum (or lesser) gain approved for the transmitter by Industry Canada. To reduce potential radio interference to other users, the antenna type and its gain should be so chosen that the equivalent isotropically radiated power (e.i.r.p.) is not more than that necessary for successful communication. This radio transmitter has been approved by Industry Canada to operate with the antenna types listed in the user guide with the maximum permissible gain and required antenna impedance for each antenna type indicated. Antenna types not included in this list, having a gain greater than the maximum gain indicated for that type, are strictly prohibited for use with this device.

Concernant les EVMs avec antennes détachables

Conformément à la réglementation d'Industrie Canada, le présent émetteur radio peut fonctionner avec une antenne d'un type et d'un gain maximal (ou inférieur) approuvé pour l'émetteur par Industrie Canada. Dans le but de réduire les risques de brouillage radioélectrique à l'intention des autres utilisateurs, il faut choisir le type d'antenne et son gain de sorte que la puissance isotrope rayonnée équivalente (p.i.r.e.) ne dépasse pas l'intensité nécessaire à l'établissement d'une communication satisfaisante. Le présent émetteur radio a été approuvé par Industrie Canada pour fonctionner avec les types d'antenne énumérés dans le manuel d'usage et ayant un gain admissible maximal et l'impédance requise pour chaque type d'antenne. Les types d'antenne non inclus dans cette liste, ou dont le gain est supérieur au gain maximal indiqué, sont strictement interdits pour l'exploitation de l'émetteur

3.3 *Japan*

3.3.1 *Notice for EVMs delivered in Japan:* Please see http://www.tij.co.jp/lsds/ti_ja/general/eStore/notice_01.page 日本国内に輸入される評価用キット、ボードについては、次のところをご覧ください。
http://www.tij.co.jp/lsds/ti_ja/general/eStore/notice_01.page

3.3.2 *Notice for Users of EVMs Considered "Radio Frequency Products" in Japan:* EVMs entering Japan may not be certified by TI as conforming to Technical Regulations of Radio Law of Japan.

If User uses EVMs in Japan, not certified to Technical Regulations of Radio Law of Japan, User is required by Radio Law of Japan to follow the instructions below with respect to EVMs:

1. Use EVMs in a shielded room or any other test facility as defined in the notification #173 issued by Ministry of Internal Affairs and Communications on March 28, 2006, based on Sub-section 1.1 of Article 6 of the Ministry's Rule for Enforcement of Radio Law of Japan,
2. Use EVMs only after User obtains the license of Test Radio Station as provided in Radio Law of Japan with respect to EVMs, or
3. Use of EVMs only after User obtains the Technical Regulations Conformity Certification as provided in Radio Law of Japan with respect to EVMs. Also, do not transfer EVMs, unless User gives the same notice above to the transferee. Please note that if User does not follow the instructions above, User will be subject to penalties of Radio Law of Japan.

【無線電波を送信する製品の開発キットをお使いになる際の注意事項】 開発キットの中には技術基準適合証明を受けていないものがあります。 技術適合証明を受けていないもののご使用に際しては、電波法遵守のため、以下のいずれかの措置を取っていただく必要がありますのでご注意ください。

1. 電波法施行規則第6条第1項第1号に基づく平成18年3月28日総務省告示第173号で定められた電波暗室等の試験設備でご使用いただく。
2. 実験局の免許を取得後ご使用いただく。
3. 技術基準適合証明を取得後ご使用いただく。

なお、本製品は、上記の「ご使用にあたっての注意」を譲渡先、移転先に通知しない限り、譲渡、移転できないものとします。

上記を遵守頂けない場合は、電波法の罰則が適用される可能性があることをご留意ください。 日本テキサス・インスツルメンツ株式会社

東京都新宿区西新宿６丁目２４番１号

西新宿三井ビル

3.3.3 *Notice for EVMs for Power Line Communication:* Please see http://www.tij.co.jp/lsds/ti_ja/general/eStore/notice_02.page

電力線搬送波通信についての開発キットをお使いになる際の注意事項については、次のところをご覧ください。http://www.tij.co.jp/lsds/ti_ja/general/eStore/notice_02.page

4 *EVM Use Restrictions and Warnings:*

4.1 EVMS ARE NOT FOR USE IN FUNCTIONAL SAFETY AND/OR SAFETY CRITICAL EVALUATIONS, INCLUDING BUT NOT LIMITED TO EVALUATIONS OF LIFE SUPPORT APPLICATIONS.

4.2 User must read and apply the user guide and other available documentation provided by TI regarding the EVM prior to handling or using the EVM, including without limitation any warning or restriction notices. The notices contain important safety information related to, for example, temperatures and voltages.

4.3 *Safety-Related Warnings and Restrictions:*

4.3.1 User shall operate the EVM within TI's recommended specifications and environmental considerations stated in the user guide, other available documentation provided by TI, and any other applicable requirements and employ reasonable and customary safeguards. Exceeding the specified performance ratings and specifications (including but not limited to input and output voltage, current, power, and environmental ranges) for the EVM may cause personal injury or death, or property damage. If there are questions concerning performance ratings and specifications, User should contact a TI field representative prior to connecting interface electronics including input power and intended loads. Any loads applied outside of the specified output range may also result in unintended and/or inaccurate operation and/or possible permanent damage to the EVM and/or interface electronics. Please consult the EVM user guide prior to connecting any load to the EVM output. If there is uncertainty as to the load specification, please contact a TI field representative. During normal operation, even with the inputs and outputs kept within the specified allowable ranges, some circuit components may have elevated case temperatures. These components include but are not limited to linear regulators, switching transistors, pass transistors, current sense resistors, and heat sinks, which can be identified using the information in the associated documentation. When working with the EVM, please be aware that the EVM may become very warm.

4.3.2 EVMs are intended solely for use by technically qualified, professional electronics experts who are familiar with the dangers and application risks associated with handling electrical mechanical components, systems, and subsystems. User assumes all responsibility and liability for proper and safe handling and use of the EVM by User or its employees, affiliates, contractors or designees. User assumes all responsibility and liability to ensure that any interfaces (electronic and/or mechanical) between the EVM and any human body are designed with suitable isolation and means to safely limit accessible leakage currents to minimize the risk of electrical shock hazard. User assumes all responsibility and liability for any improper or unsafe handling or use of the EVM by User or its employees, affiliates, contractors or designees.

4.4 User assumes all responsibility and liability to determine whether the EVM is subject to any applicable international, federal, state, or local laws and regulations related to User's handling and use of the EVM and, if applicable, User assumes all responsibility and liability for compliance in all respects with such laws and regulations. User assumes all responsibility and liability for proper disposal and recycling of the EVM consistent with all applicable international, federal, state, and local requirements.

5. *Accuracy of Information:* To the extent TI provides information on the availability and function of EVMs, TI attempts to be as accurate as possible. However, TI does not warrant the accuracy of EVM descriptions, EVM availability or other information on its websites as accurate, complete, reliable, current, or error-free.

6. *Disclaimers:*

   6.1 EXCEPT AS SET FORTH ABOVE, EVMS AND ANY WRITTEN DESIGN MATERIALS PROVIDED WITH THE EVM (AND THE DESIGN OF THE EVM ITSELF) ARE PROVIDED "AS IS" AND "WITH ALL FAULTS." TI DISCLAIMS ALL OTHER WARRANTIES, EXPRESS OR IMPLIED, REGARDING SUCH ITEMS, INCLUDING BUT NOT LIMITED TO ANY IMPLIED WARRANTIES OF MERCHANTABILITY OR FITNESS FOR A PARTICULAR PURPOSE OR NON-INFRINGEMENT OF ANY THIRD PARTY PATENTS, COPYRIGHTS, TRADE SECRETS OR OTHER INTELLECTUAL PROPERTY RIGHTS.

   6.2 EXCEPT FOR THE LIMITED RIGHT TO USE THE EVM SET FORTH HEREIN, NOTHING IN THESE TERMS AND CONDITIONS SHALL BE CONSTRUED AS GRANTING OR CONFERRING ANY RIGHTS BY LICENSE, PATENT, OR ANY OTHER INDUSTRIAL OR INTELLECTUAL PROPERTY RIGHT OF TI, ITS SUPPLIERS/LICENSORS OR ANY OTHER THIRD PARTY, TO USE THE EVM IN ANY FINISHED END-USER OR READY-TO-USE FINAL PRODUCT, OR FOR ANY INVENTION, DISCOVERY OR IMPROVEMENT MADE, CONCEIVED OR ACQUIRED PRIOR TO OR AFTER DELIVERY OF THE EVM.

7. *USER'S INDEMNITY OBLIGATIONS AND REPRESENTATIONS.* USER WILL DEFEND, INDEMNIFY AND HOLD TI, ITS LICENSORS AND THEIR REPRESENTATIVES HARMLESS FROM AND AGAINST ANY AND ALL CLAIMS, DAMAGES, LOSSES, EXPENSES, COSTS AND LIABILITIES (COLLECTIVELY, "CLAIMS") ARISING OUT OF OR IN CONNECTION WITH ANY HANDLING OR USE OF THE EVM THAT IS NOT IN ACCORDANCE WITH THESE TERMS AND CONDITIONS. THIS OBLIGATION SHALL APPLY WHETHER CLAIMS ARISE UNDER STATUTE, REGULATION, OR THE LAW OF TORT, CONTRACT OR ANY OTHER LEGAL THEORY, AND EVEN IF THE EVM FAILS TO PERFORM AS DESCRIBED OR EXPECTED.

8. *Limitations on Damages and Liability:*

   8.1 *General Limitations*. IN NO EVENT SHALL TI BE LIABLE FOR ANY SPECIAL, COLLATERAL, INDIRECT, PUNITIVE, INCIDENTAL, CONSEQUENTIAL, OR EXEMPLARY DAMAGES IN CONNECTION WITH OR ARISING OUT OF THESE TERMS ANDCONDITIONS OR THE USE OF THE EVMS PROVIDED HEREUNDER, REGARDLESS OF WHETHER TI HAS BEEN ADVISED OF THE POSSIBILITY OF SUCH DAMAGES. EXCLUDED DAMAGES INCLUDE, BUT ARE NOT LIMITED TO, COST OF REMOVAL OR REINSTALLATION, ANCILLARY COSTS TO THE PROCUREMENT OF SUBSTITUTE GOODS OR SERVICES, RETESTING, OUTSIDE COMPUTER TIME, LABOR COSTS, LOSS OF GOODWILL, LOSS OF PROFITS, LOSS OF SAVINGS, LOSS OF USE, LOSS OF DATA, OR BUSINESS INTERRUPTION. NO CLAIM, SUIT OR ACTION SHALL BE BROUGHT AGAINST TI MORE THAN ONE YEAR AFTER THE RELATED CAUSE OF ACTION HAS OCCURRED.

   8.2 *Specific Limitations.* IN NO EVENT SHALL TI'S AGGREGATE LIABILITY FROM ANY WARRANTY OR OTHER OBLIGATION ARISING OUT OF OR IN CONNECTION WITH THESE TERMS AND CONDITIONS, OR ANY USE OF ANY TI EVM PROVIDED HEREUNDER, EXCEED THE TOTAL AMOUNT PAID TO TI FOR THE PARTICULAR UNITS SOLD UNDER THESE TERMS AND CONDITIONS WITH RESPECT TO WHICH LOSSES OR DAMAGES ARE CLAIMED. THE EXISTENCE OF MORE THAN ONE CLAIM AGAINST THE PARTICULAR UNITS SOLD TO USER UNDER THESE TERMS AND CONDITIONS SHALL NOT ENLARGE OR EXTEND THIS LIMIT.

9. *Return Policy.* Except as otherwise provided, TI does not offer any refunds, returns, or exchanges. Furthermore, no return of EVM(s) will be accepted if the package has been opened and no return of the EVM(s) will be accepted if they are damaged or otherwise not in a resalable condition. If User feels it has been incorrectly charged for the EVM(s) it ordered or that delivery violates the applicable order, User should contact TI. All refunds will be made in full within thirty (30) working days from the return of the components(s), excluding any postage or packaging costs.

10. *Governing Law:* These terms and conditions shall be governed by and interpreted in accordance with the laws of the State of Texas, without reference to conflict-of-laws principles. User agrees that non-exclusive jurisdiction for any dispute arising out of or relating to these terms and conditions lies within courts located in the State of Texas and consents to venue in Dallas County, Texas. Notwithstanding the foregoing, any judgment may be enforced in any United States or foreign court, and TI may seek injunctive relief in any United States or foreign court.

Mailing Address: Texas Instruments, Post Office Box 655303, Dallas, Texas 75265
Copyright © 2015, Texas Instruments Incorporated

IMPORTANT NOTICE

Texas Instruments Incorporated and its subsidiaries (TI) reserve the right to make corrections, enhancements, improvements and other changes to its semiconductor products and services per JESD46, latest issue, and to discontinue any product or service per JESD48, latest issue. Buyers should obtain the latest relevant information before placing orders and should verify that such information is current and complete. All semiconductor products (also referred to herein as “components”) are sold subject to TI’s terms and conditions of sale supplied at the time of order acknowledgment.

TI warrants performance of its components to the specifications applicable at the time of sale, in accordance with the warranty in TI’s terms and conditions of sale of semiconductor products. Testing and other quality control techniques are used to the extent TI deems necessary to support this warranty. Except where mandated by applicable law, testing of all parameters of each component is not necessarily performed.

TI assumes no liability for applications assistance or the design of Buyers’ products. Buyers are responsible for their products and applications using TI components. To minimize the risks associated with Buyers’ products and applications, Buyers should provide adequate design and operating safeguards.

TI does not warrant or represent that any license, either express or implied, is granted under any patent right, copyright, mask work right, or other intellectual property right relating to any combination, machine, or process in which TI components or services are used. Information published by TI regarding third-party products or services does not constitute a license to use such products or services or a warranty or endorsement thereof. Use of such information may require a license from a third party under the patents or other intellectual property of the third party, or a license from TI under the patents or other intellectual property of TI.

Reproduction of significant portions of TI information in TI data books or data sheets is permissible only if reproduction is without alteration and is accompanied by all associated warranties, conditions, limitations, and notices. TI is not responsible or liable for such altered documentation. Information of third parties may be subject to additional restrictions.

Resale of TI components or services with statements different from or beyond the parameters stated by TI for that component or service voids all express and any implied warranties for the associated TI component or service and is an unfair and deceptive business practice. TI is not responsible or liable for any such statements.

Buyer acknowledges and agrees that it is solely responsible for compliance with all legal, regulatory and safety-related requirements concerning its products, and any use of TI components in its applications, notwithstanding any applications-related information or support that may be provided by TI. Buyer represents and agrees that it has all the necessary expertise to create and implement safeguards which anticipate dangerous consequences of failures, monitor failures and their consequences, lessen the likelihood of failures that might cause harm and take appropriate remedial actions. Buyer will fully indemnify TI and its representatives against any damages arising out of the use of any TI components in safety-critical applications.

In some cases, TI components may be promoted specifically to facilitate safety-related applications. With such components, TI’s goal is to help enable customers to design and create their own end-product solutions that meet applicable functional safety standards and requirements. Nonetheless, such components are subject to these terms.

No TI components are authorized for use in FDA Class III (or similar life-critical medical equipment) unless authorized officers of the parties have executed a special agreement specifically governing such use.

Only those TI components which TI has specifically designated as military grade or “enhanced plastic” are designed and intended for use in military/aerospace applications or environments. Buyer acknowledges and agrees that any military or aerospace use of TI components which have ***not*** been so designated is solely at the Buyer's risk, and that Buyer is solely responsible for compliance with all legal and regulatory requirements in connection with such use.

TI has specifically designated certain components as meeting ISO/TS16949 requirements, mainly for automotive use. In any case of use of non-designated products, TI will not be responsible for any failure to meet ISO/TS16949.

Products		**Applications**	
Audio	www.ti.com/audio	Automotive and Transportation	www.ti.com/automotive
Amplifiers	amplifier.ti.com	Communications and Telecom	www.ti.com/communications
Data Converters	dataconverter.ti.com	Computers and Peripherals	www.ti.com/computers
DLP® Products	www.dlp.com	Consumer Electronics	www.ti.com/consumer-apps
DSP	dsp.ti.com	Energy and Lighting	www.ti.com/energy
Clocks and Timers	www.ti.com/clocks	Industrial	www.ti.com/industrial
Interface	interface.ti.com	Medical	www.ti.com/medical
Logic	logic.ti.com	Security	www.ti.com/security
Power Mgmt	power.ti.com	Space, Avionics and Defense	www.ti.com/space-avionics-defense
Microcontrollers	microcontroller.ti.com	Video and Imaging	www.ti.com/video
RFID	www.ti-rfid.com		
OMAP Applications Processors	www.ti.com/omap	**TI E2E Community**	e2e.ti.com
Wireless Connectivity	www.ti.com/wirelessconnectivity		

Mailing Address: Texas Instruments, Post Office Box 655303, Dallas, Texas 75265
Copyright © 2015, Texas Instruments Incorporated